Body-Solid

Art.Nr. 1331905
1331918

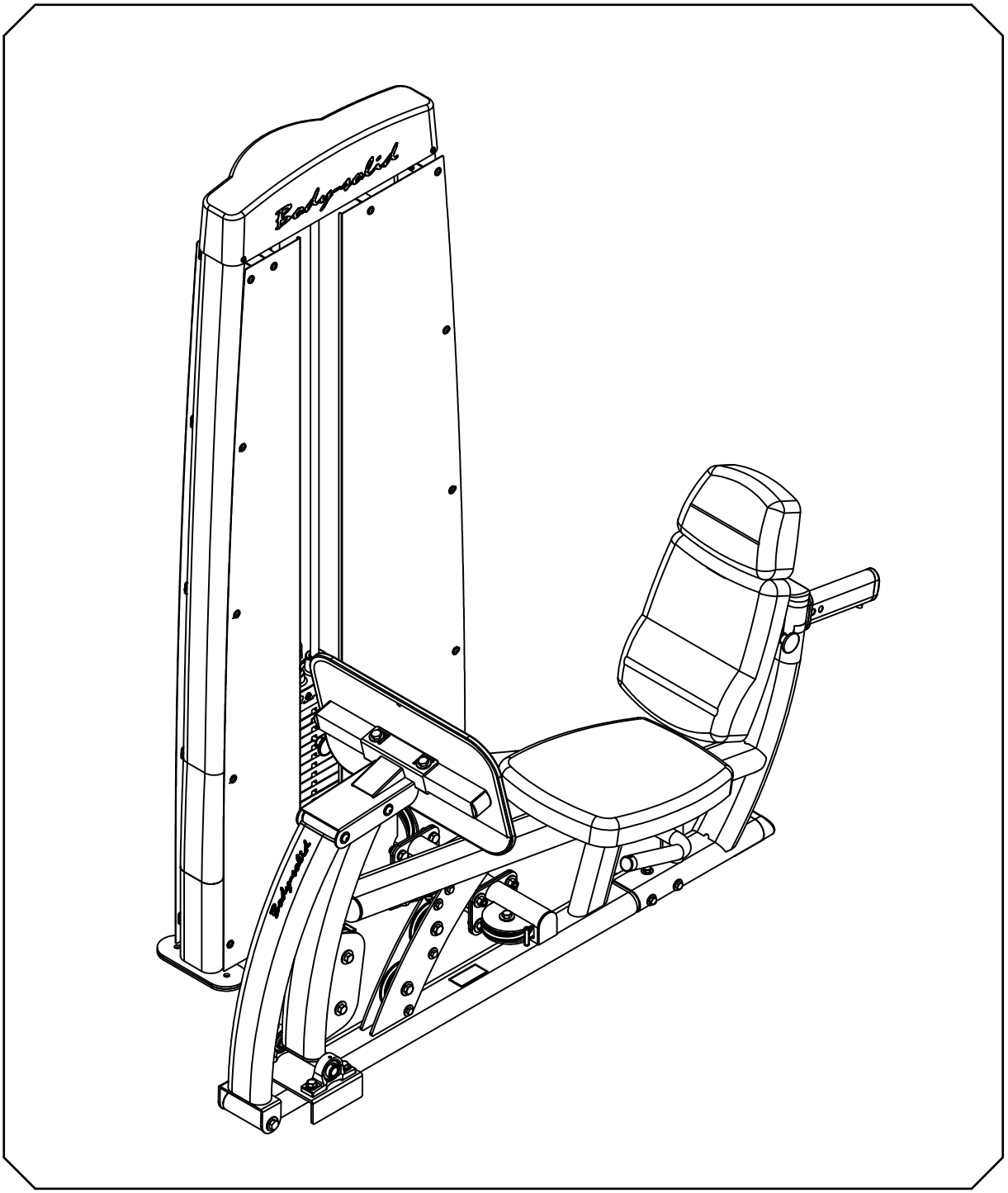

BODY-SOLID,Inc.
1900 S. Des Plaines Ave.
Forest Park, IL 60130 USA
Phone:(708)427-3555
Fax:(708)427-3556
www.bodysolid.com

DCLP.3 OWNER'S MANUAL

Warning, Safety & Maintenance

Be sure that all users carefully read and understand all warning, safety and maintenance labels on the machine before each use. Failure to do so may result in death or serious injury.

It is imperative that you retain your Owner's Manual and be sure all warning labels are legible and intact. Replacement Owner's Manuals and warning labels are available from your local Body-Solid dealer.

If you have any questions about the operation, set up or maintenance of this machine please call our customer service department at 1 (800) 556-3113.

THERE IS A RISK ASSUMED BY INDIVIDUALS WHO USE THIS TYPE OF EQUIPMENT. TO MINIMIZE RISK, YOU MUST FOLLOW THESE RULES:

1. Inspect equipment before each workout. Check that all nuts, bolts, screws and pop pins are in place and fully tightened. Also, before use, check cables for signs of wear. Replace all worn parts immediately. Never use machine if any parts are damaged or missing. **FAILURE TO FOLLOW THESE RULES MAY RESULT IN SERIOUS INJURY.**
2. Keep clear of the cables and all moving parts when the machine is in use.
3. Always make sure all Snap Links are closed when doing any cable/pulley/strap exercises.
4. Exercise with care. Perform your exercises at a smooth moderate pace; never perform jerky or uncoordinated movements that may cause injury.
5. It is recommended that you should workout with a training partner.
6. Do not allow children or minors to play on or around this equipment.
7. If unsure of proper use of equipment, call your local Body-Solid distributor or the Body-Solid customer service department at 1-800-556-3113.
8. WARNING: Consult your physician before starting your exercise program. For your own safety, do not begin any exercise program without proper instruction. RAL8-6-03 WC-54

WARNING

Safety and Maintenance of Cables

IMPORTANT: Cables are wear items. It is your responsibility to prevent unexpected breakage. **Cable inspection should be performed daily.** Inspect all cables, the nylon coating on all cables, and the area near the fitting at each end of each cable. **Replace any damaged or worn cable immediately.** Do not allow the machine to be used until damaged or worn cables are replaced. Using or allowing a machine to be used with a suspect cable can result in serious injury. See Owner's Manual for more information.

For Body-Solid Customer Service
Call 1-800-556-3113

MAINTENANCE SCHEDULE

Check the function and integrity of the following components. As noted, Inspect equipment before each workout. Replace all damaged, broken or worn components immediately.

		DAILY	WEEKLY
Cables:	Check tension, end fittings, and coating	✓	
	Check that locking nut at weight stack is tight		✓
Upholstery:	Wipe down and dry	✓	
	Clean and condition		✓
Frame:	Wipe down and dry	✓	
	Polish / Wax		✓
Chrome:	Wipe down and dry	✓	
	Polish / Lubricate		✓
Nuts / Bolts / Fasteners: Tighten and / or adjust as needed			✓
Guide Rods: Lubricate and clean			✓
Linear Rods: Lubricate and clean			✓
Seat Sleeves: Lubricate and clean			✓
Adjustments / Locking Pins / Tightening Knobs			✓
Weight Stack Pins			✓
Warning Instruction Labels			✓
Springs / Pop Pins		✓	
Anti Skid Surfaces			✓
Hand Grips / Rollers			✓

For Body-Solid Customer Service
Call 1-800-556-3113
#MSSTKR0803

Important Safety Instructions

Before beginning any fitness program, you should obtain a complete physical examination from your physician.

Il est conseille de subir un examen medical complet avant d'entreprendre tout programme d'exercise.
Si vous avez des etourdissements ou des faiblesses, arretez les exercices immediatement.

Antes de comenzar cualquier programma de ejercicios, deberias tener un examen isico con su doctor.

When using exercise equipment, you should always take basic precautions, including the following:

- Read all instructions before using your machine. These instructions are written to ensure your safety and to protect the unit.
- **Do not remove any safety labels from the machine.**
- Do not allow children on or near the equipment.
- Use the equipment only for its intended purpose as described in this guide. Do not use accessory attachments that are not recommended by the manufacturer. Such attachments might cause injuries.
- Wear proper exercise clothing and shoes for your workout, no loose clothing.
- Keep hands, limbs, loose clothing, and long hair well out of the way of all moving parts.
- Use care when getting on or off the unit.
- Do not overexert yourself or work to exhaustion.
- If you feel any pain or abnormal symptoms, stop your workout immediately and consult your physician.
- Never operate unit when it has been dropped or damaged. Return the equipment to a service center for examination and repair.
- Never drop or insert objects into any opening in the equipment.
- **IMPORTANT:** Cables are wear items. It is your responsibility to prevent unexpected breakage. Cable inspection should be performed daily. Inspect all cables, and the area near the fitting at each end of each cable. Replace any damaged or worn cable immediately. Do not allow the machine to be used until these are replaced.
- Do not use the equipment outdoors or near water.

Personal Safety During Assembly

- Before beginning assembly, please take the time to read the instructions thoroughly.
- Read each step in the assembly instructions and follow the steps in sequence. Do not skip ahead. If you skip ahead, you may learn later that you have to disassemble components and that you may have damaged the equipment.
- Assemble and operate your machine on a solid, level surface. Locate the unit a few feet from the walls or furniture to provide easy access.

Your machine is designed for your enjoyment. By following these precautions and using common sense, you will have many safe and pleasurable hours of healthful exercise.

After assembly, you should check all functions to ensure correct operation. If you experience problems, first recheck the assembly instructions to locate any possible errors made during assembly. If you are unable to correct the problem, call the dealer from whom you purchased the machine or call **1-800-556-3113** for the dealer nearest you.

Obtaining Service

Please use your Owner's Manual to make sure that all parts have been included in your shipment. When ordering parts, you must use the part number and description from your Owner's Manual. Use only Body-Solid replacement parts when servicing this machine. Failure to do so will void your warranty and could result in personal injury.

For information about product operation or service, check out the official Body-Solid website at www.bodysolid.com or contact an authorized Body-Solid dealer or a Body-Solid factory-authorized service company or contact Body-Solid customer service at one of the following:

Toll Free: 1-800-556-3113
Phone: 1-708-427-3555
Fax: 1-708-427-3556
Hours: M-F 8:30-5:00 CST
E-Mail: service@bodysolid.com

Or write to: Body-Solid, Inc.
Service Department
1900 S. Des Plaines Ave.
Forest Park, IL 60130 USA

Retain this Owner's Manual for future reference. If you need to order replacement parts please be prepared to provide the following information when contacting us so that we can assist you better.

1. **Model Number**
2. **Proof of Purchase**
3. **Place of Purchase**
4. **Serial Number (S/N)**
5. **Part # and Description**

HARDWARW ILLUSTRATION

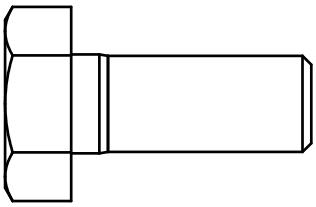

(A1)HEX BOLT 1/2"X1-1/4"L PARTIAL QTY.8

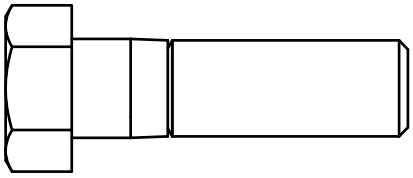

(A2)HEX BOLT 1/2"X1-3/4"L PARTIAL QTY.4

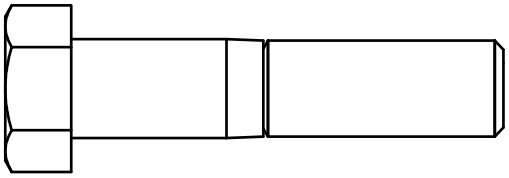

(A3)HEX BOLT 1/2"X2-1/4"L PARTIAL QTY.2

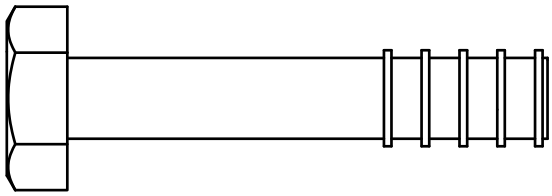

(A4)HEX BOLT 1/2"X2-1/2"L PARTIAL QTY.2

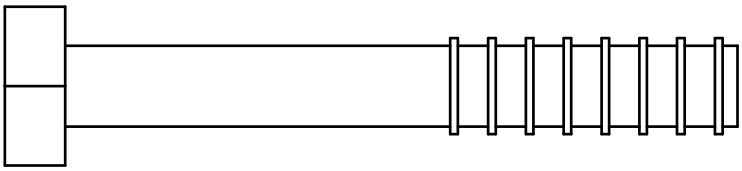

(A5)HEX BOLT 1/2"X3-1/2"L PARTIAL QTY.2

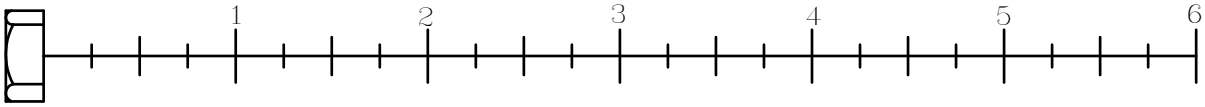

HARDWARW ILLUSTRATION

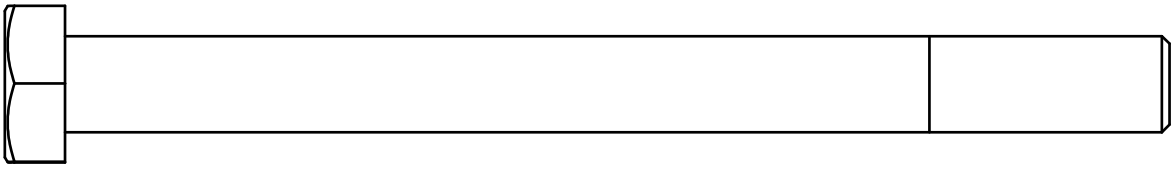

(A6)HEX BOLT 1/2"X5-3/4"L PARTIAL QTY.2

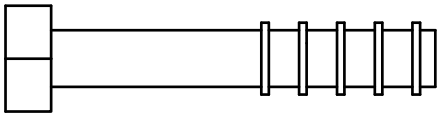

(A7)HEX BOLT 3/8"X2"L PARTIAL QTY.4

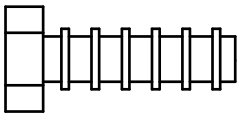

(A8)HEX BOLT 5/16"X1"L PARTIAL QTY.4

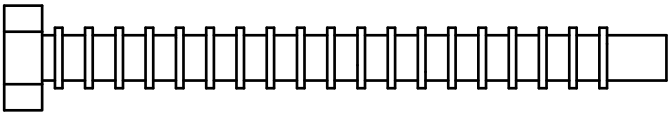

(A9)HEX BOLT 5/16X3-1/4"L PARTIAL QTY.2

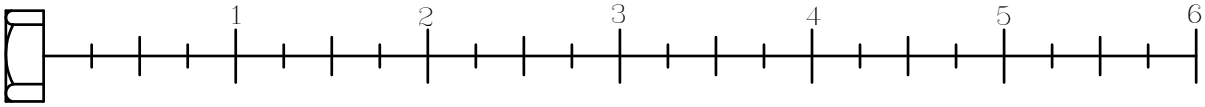

HARDWARW ILLUSTRATION

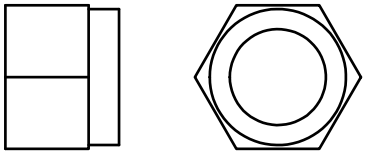

(B1)NYLON LOCK NUT1/2" QTY.20

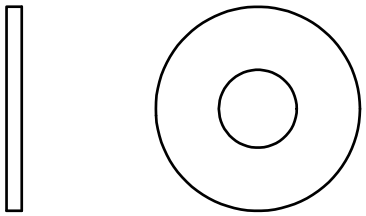

(C3)3/8"(I.D.)FLAT WASHER Ø27 QTY.8

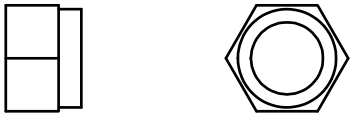

(B2)NYLON LOCK NUT 3/8" QTY.4

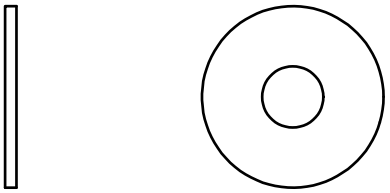

(C4)5/16"(I.D.)FLAT WASHER Ø24 QTY.6

(C5)SPRING WASHER 5/16" QTY.6

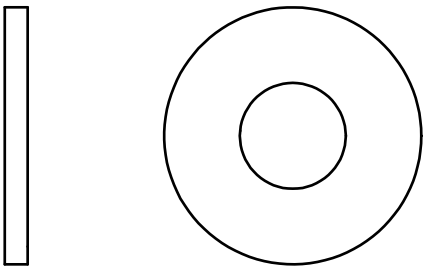

(C1)1/2"(I.D.)FLAT WASHER Ø34 QTY.24

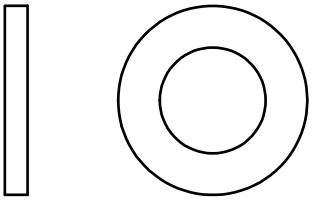

(C2)1/2"(I.D.)FLAT WASHER Ø25 QTY.16

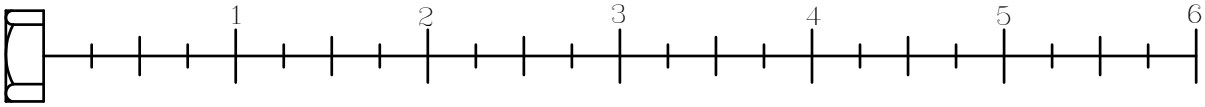

HARDWARW ILLUSTRATION

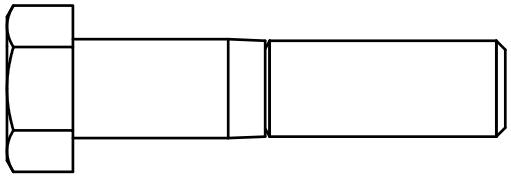

(AA2)HEX BOLT 1/2"X2-1/4"L PARTIAL QTY.4

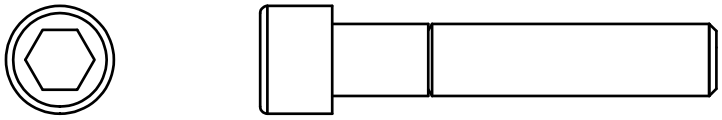

(AA4)ROUND INNER HEAD 3/8"X2"L PARTIAL QTY.1

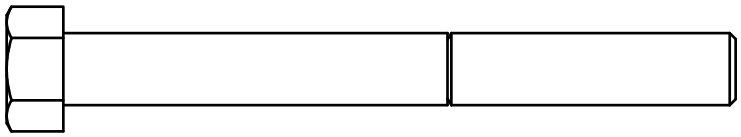

(AA5)ROUND INNER HEAD 3/8"X3-1/2"L PARTIAL QTY.1

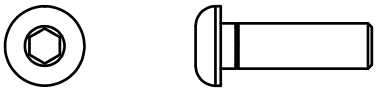

(AA6)ROUND INNER HEX SCREW M6X20L PARTIAL QTY.24

(AA7)ROUND CROSS SCREW 5/32"X1/4"L PARTIAL QTY.4

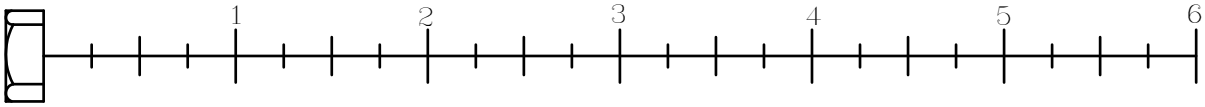

HARDWARW ILLUSTRATION

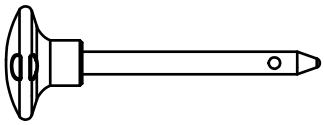

(AA8)10LB PIN(8250-071) QTY.1

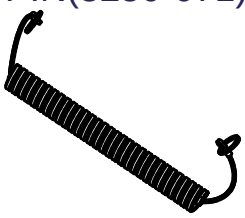

(AA9)ELASTIC BOLT QTY.1

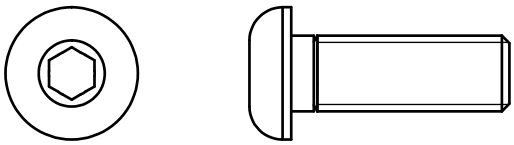

(AA11)ROUND INNER HEX SCREW
M10X30L PARTIAL QTY.1

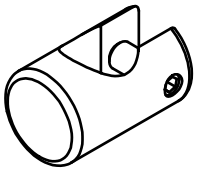

(AA12)FIRM SHEATH(8890-046) QTY.1

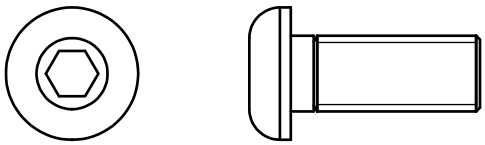

(AA13)ROUND INNER HEX SCREW
M10X25L PARTIAL QTY.1

(BB2)NYLON LOCK NUT1/2" QTY.4

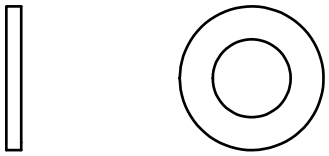

(CC1)3/8"(I.D.)FLAT WASHER Ø19 QTY.2

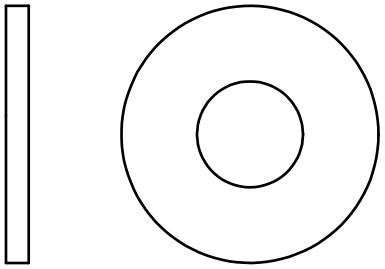

(CC2)1/2"(I.D.)FLAT WASHER Ø34 QTY.6

(CC3)M6(I.D.)FLAT WASHER Ø13 QTY.24

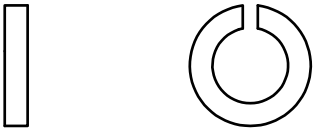

(CC6)SPRING WASHER 3/8" QTY.1

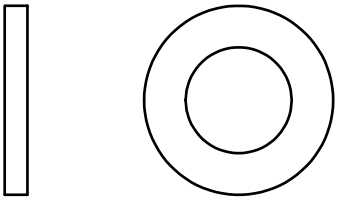

(CC7)1/2"(I.D.)FLAT WASHER Ø25 QTY.2

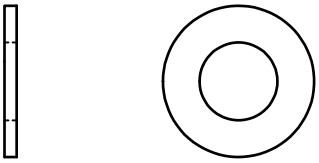

(CC8)M10(I.D.)FLAT WASHER Ø20 QTY.2

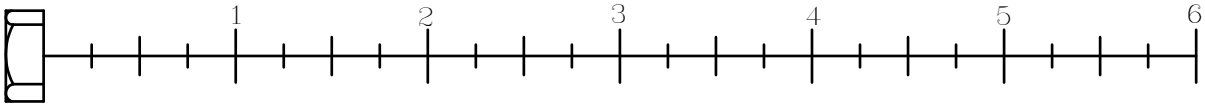

HARDWARW ILLUSTRATION

(BB3)NYLON LOCK NUT3/8" QTY.1

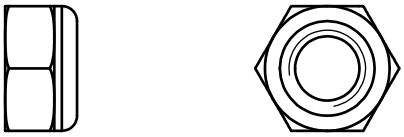

(BB4)NYLON LOCK NUT M10 QTY.2

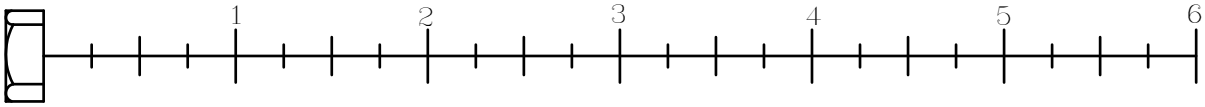

HARDWARW ILLUSTRATION

D1

D2

D3

D4

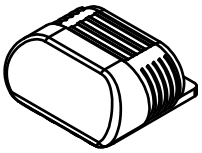

D5

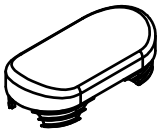

D6

(D1)Ø8 SPRING SNAP LINK(8810-001) ----------[1PCS]
(D2)□50X50X1.8t END CAP(9211-087) ----------[2PCS]
(D3)50X100 NYLON BUSHING(9211-107) ----------[2PCS]
(D4)58X116X2.5tX65H FOOT CAP(9211-109) ----------[1PCS]
(D5)58X116X2.5t END CAP(9211-112)----------[1PCS]
(D6)40X80X2t END CAP(9211-113) ---------- [1PCS]
(D7)116X58X29 RUBBER PAD(9310-057)---------- [1PCS]
(D8)Ø4" 1/2"PULLEY(9213-010B) ---------- [9PCS]
(D9)Ø3/4" SHAFT COLLAR(9211-046) ---------- [2PCS]
(D10)Ø4"RUBBER DOUNT(9310-017)----------[2PCS]
(D11)TOP PLATE(8400-006) ---------- [1PCS]
(D13)95X250 RUBBER PAD(9310-060) ---------- [2PCS]
(D14)2865 STEEL CABLE(FDCLPA2) ---------- [1PCS]
(D15)3705 STEEL CABLE(FDCLPB) ---------- [1PCS]
(D16)DLP FOR DGYM STEEL CABLE(FDCLPC)---------- [1PCS]
(D17)WEIGHT SELECTOR BAR(8210-042B) ---------- [1PCS]

D7

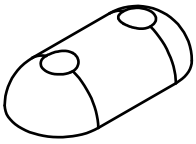

D8

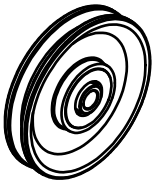

D9

D10

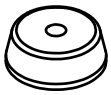

D11

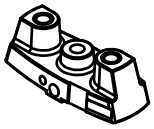

D13

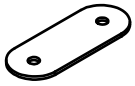

D14

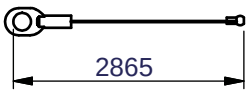

D15

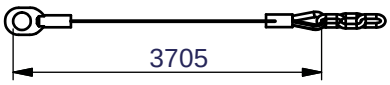

D17

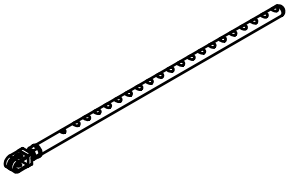

PARTS ILLUSTRATION

A [1PCS]

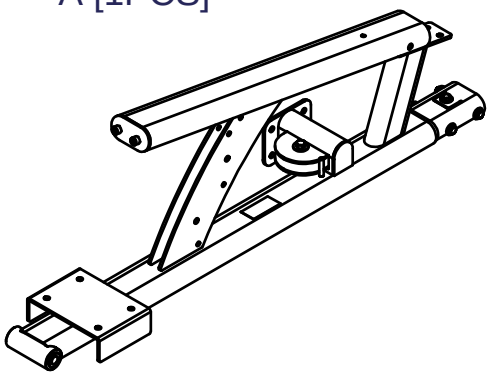

B [1PCS]

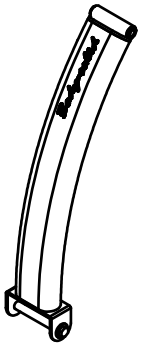

C [1PCS]

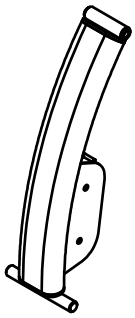

D [1PCS]

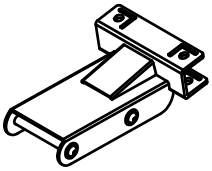

E[1PCS]

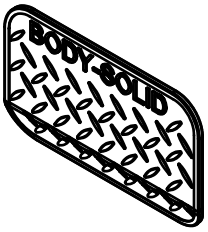

F [1PCS]

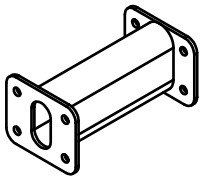

G [1PCS]

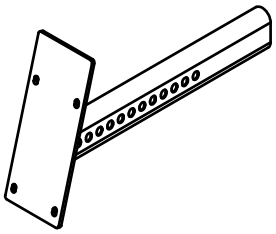

H [1PCS]

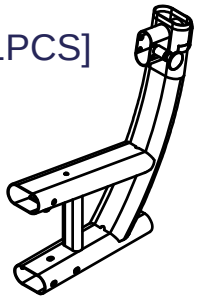

Direction

I [1PCS]

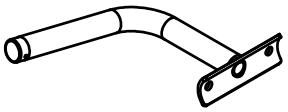

J [1PCS]

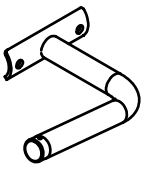

Direction

K [1PCS]
9111-055

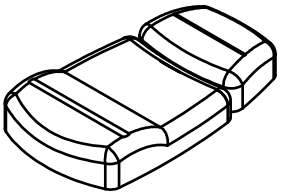

L [1PCS)
9122-040

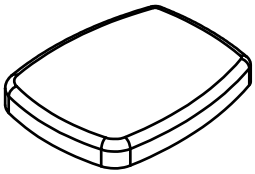

M [2PCS)
8510-005

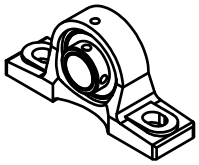

N1 [1PCS)
6640-021

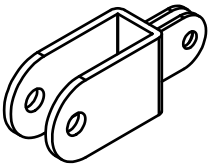

O [1PCS)
9440-160

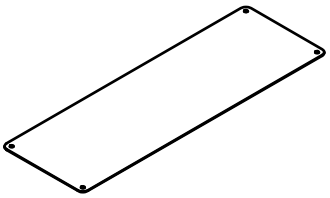

PARTS ILLUSTRATION

AA[1PCS]
6610-003

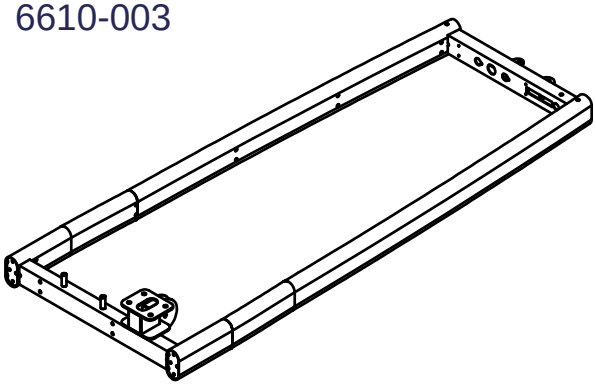

AB[1PCS]
8380-051

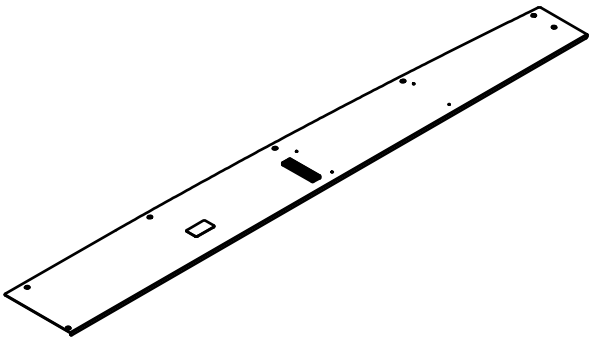

AC[1PCS]
8380-049

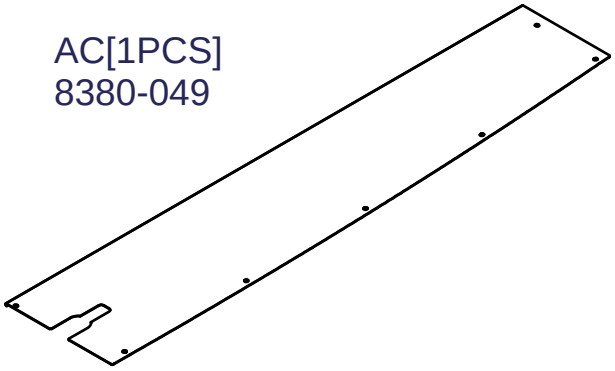

AD[1PCS]
8380-050

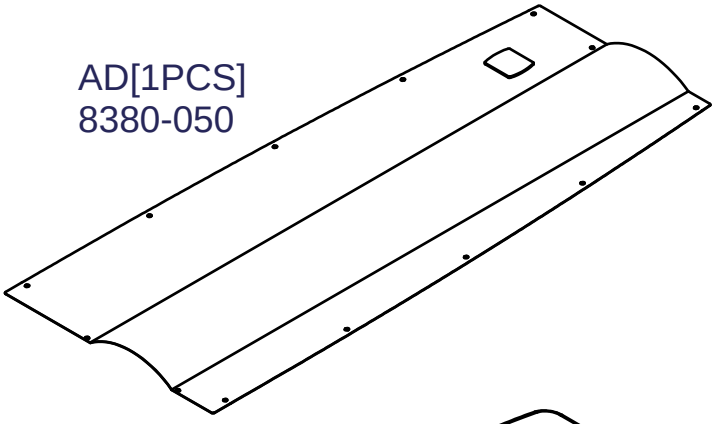

AE[2PCS]

260159 (Ø3/4"X1932L)

AK[1PCS]
9211-111A

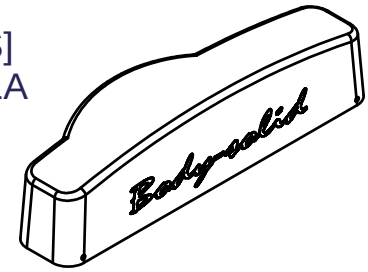

AG[2PCS]
8313-144

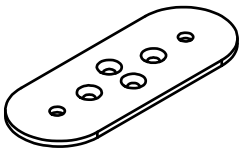

AH[11PCS]
8321-040

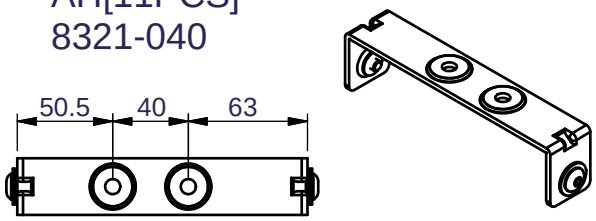

AI[1PCS]
8321-040

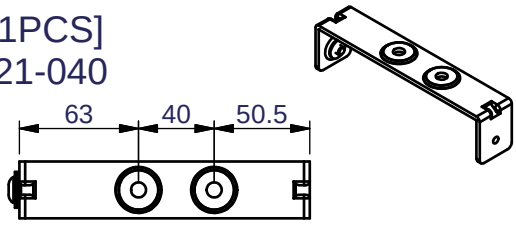

AJ[2PCS]
8321-040

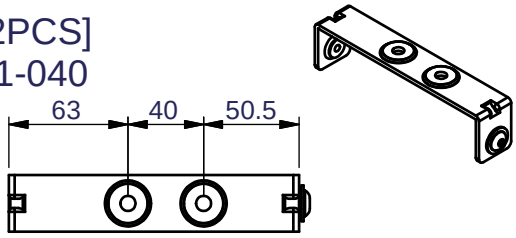

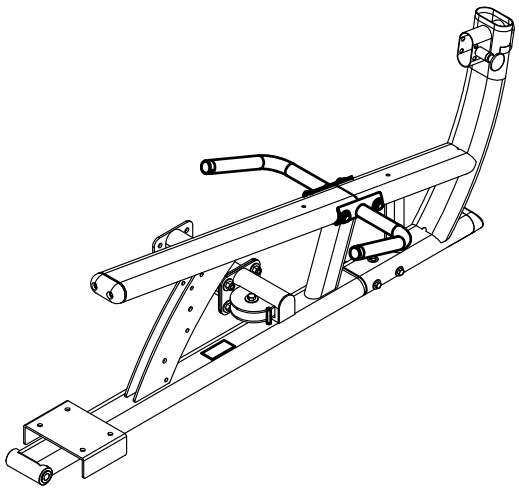

Above shows STEP 1
assembled and completed

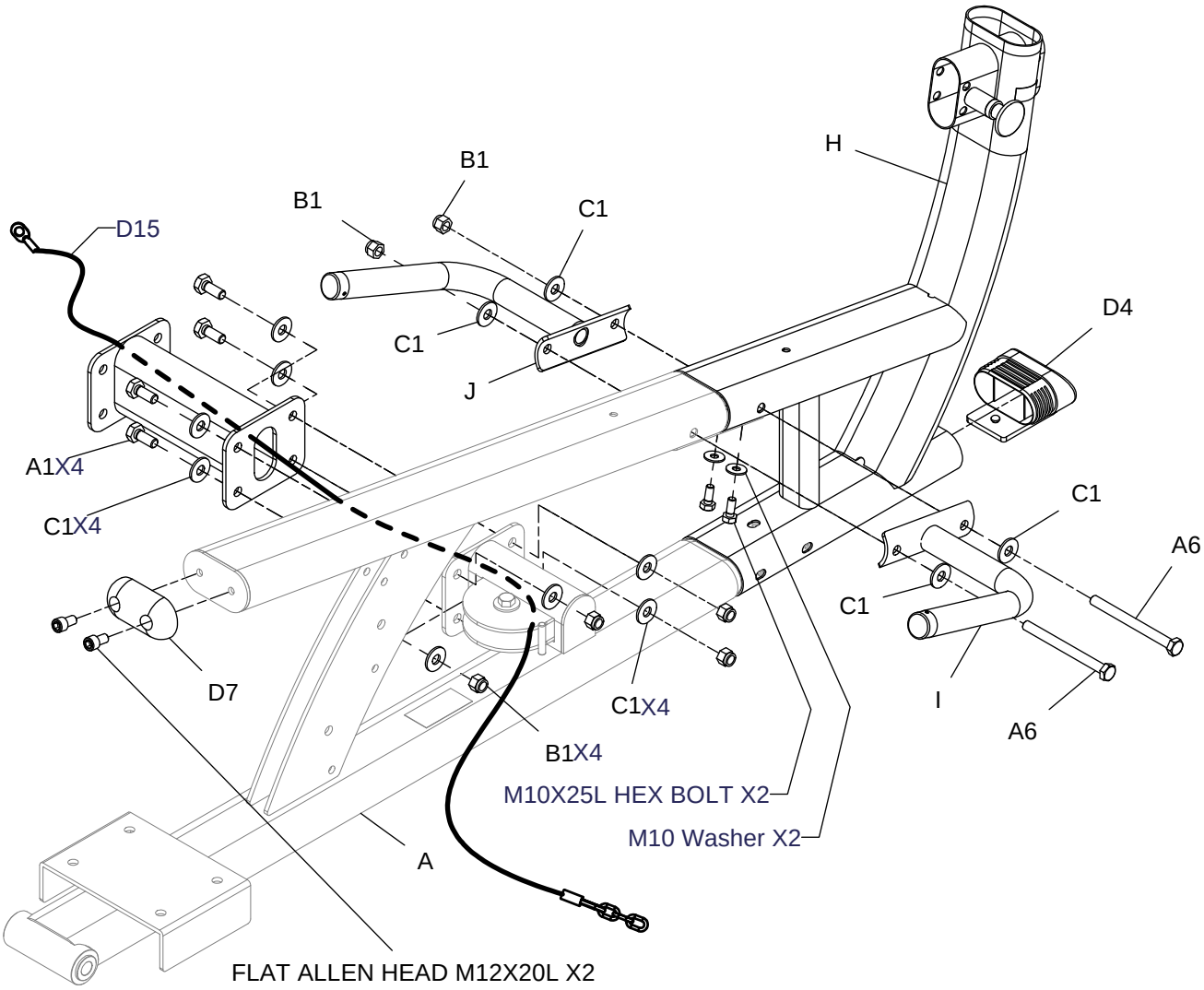

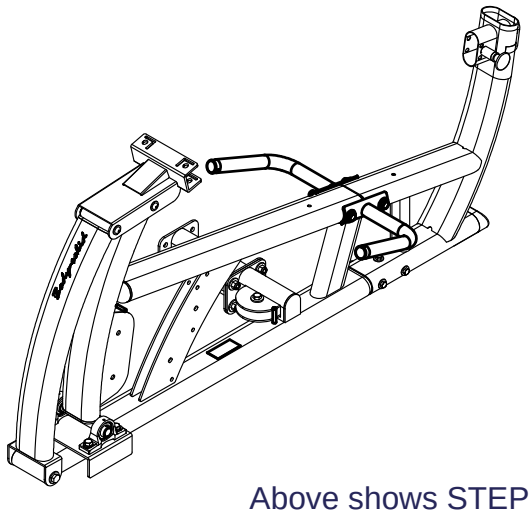

Above shows STEP 2
assembled and completed

D

M10 Washer X4

M10X16L Round Bolt X4

Ø5/8"X129L Shaft X2

B

C

Ø3/4"X143L Shaft

M

A2 X4

C2 X4

M10 Washer X6

M10X16L HEX BOLT X6

M

C2 X4

B1 X4

1/2"X3/4"L HEX Bolt X2

1/2" Washer X2

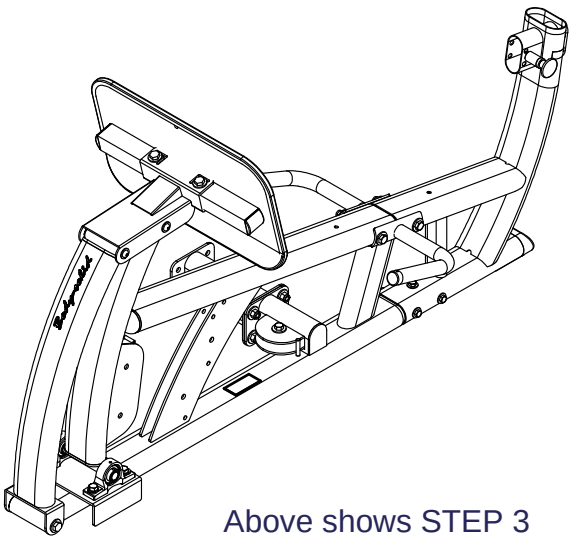

Above shows STEP 3
assembled and completed

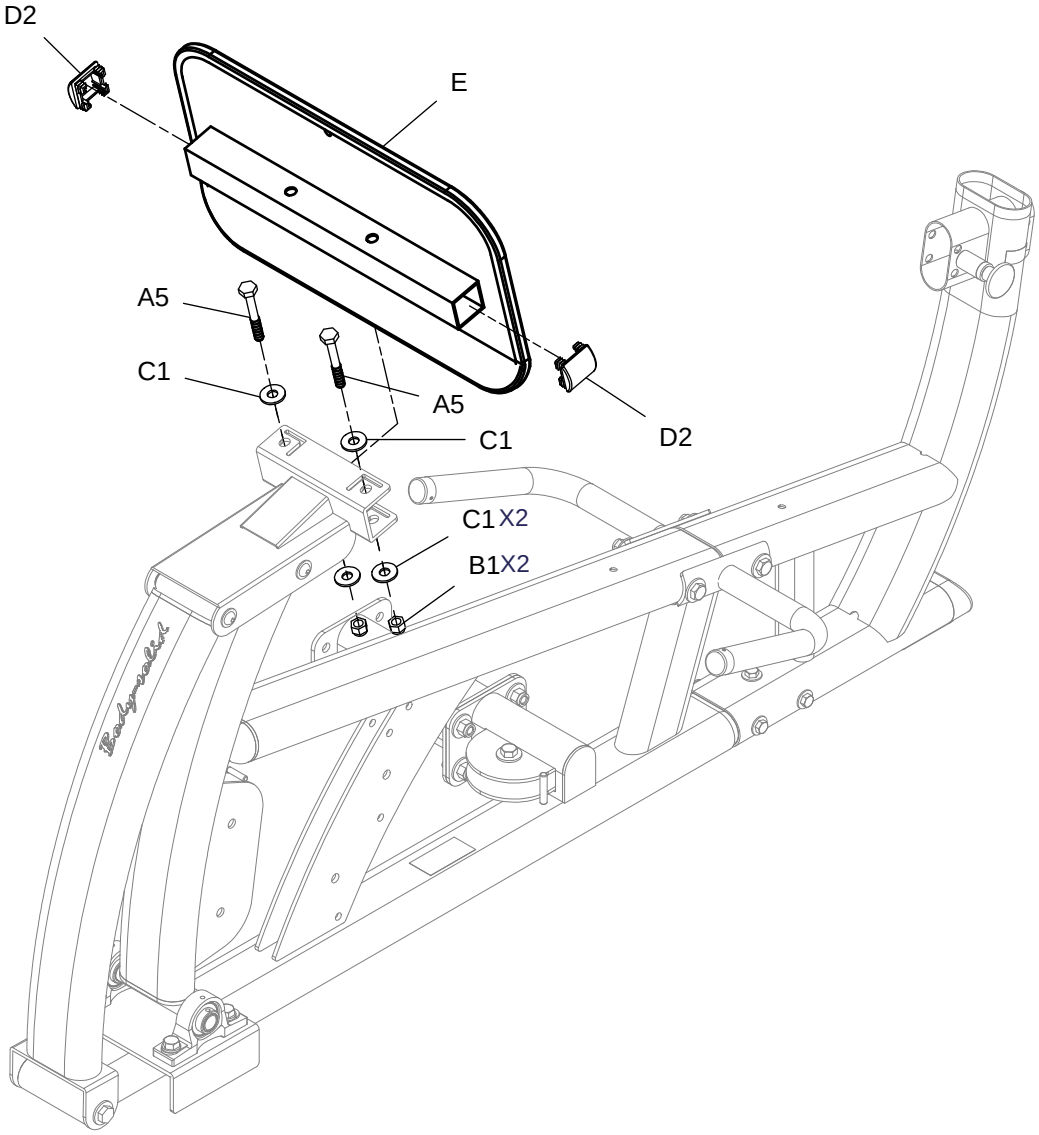

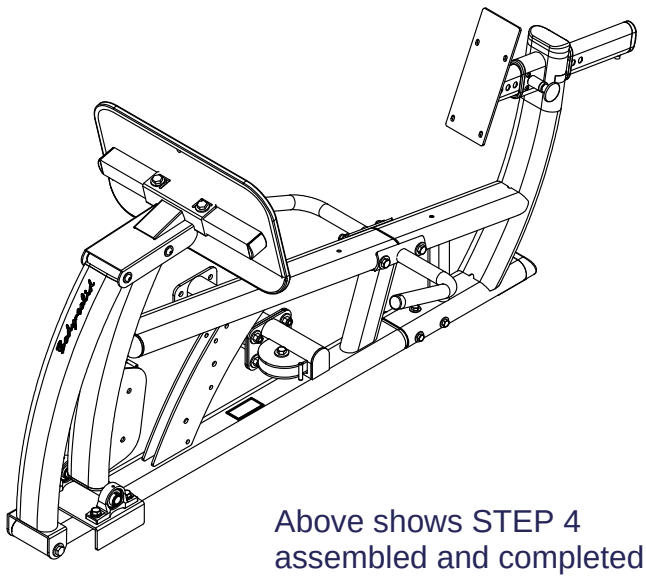

Above shows STEP 4
assembled and completed

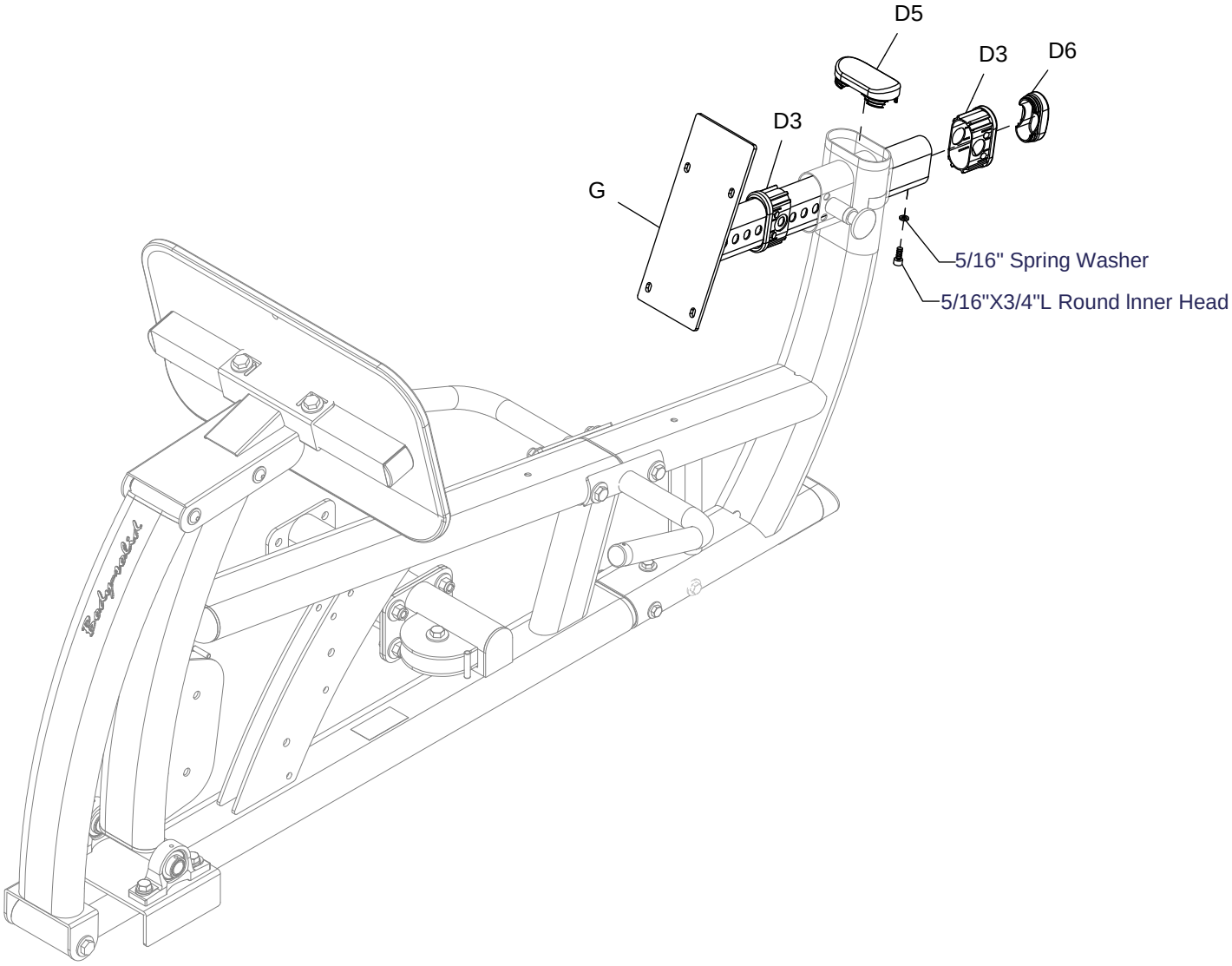

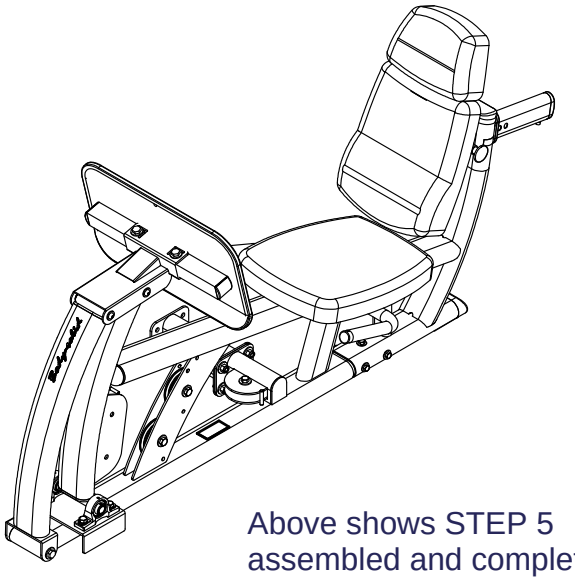

Above shows STEP 5
assembled and completed

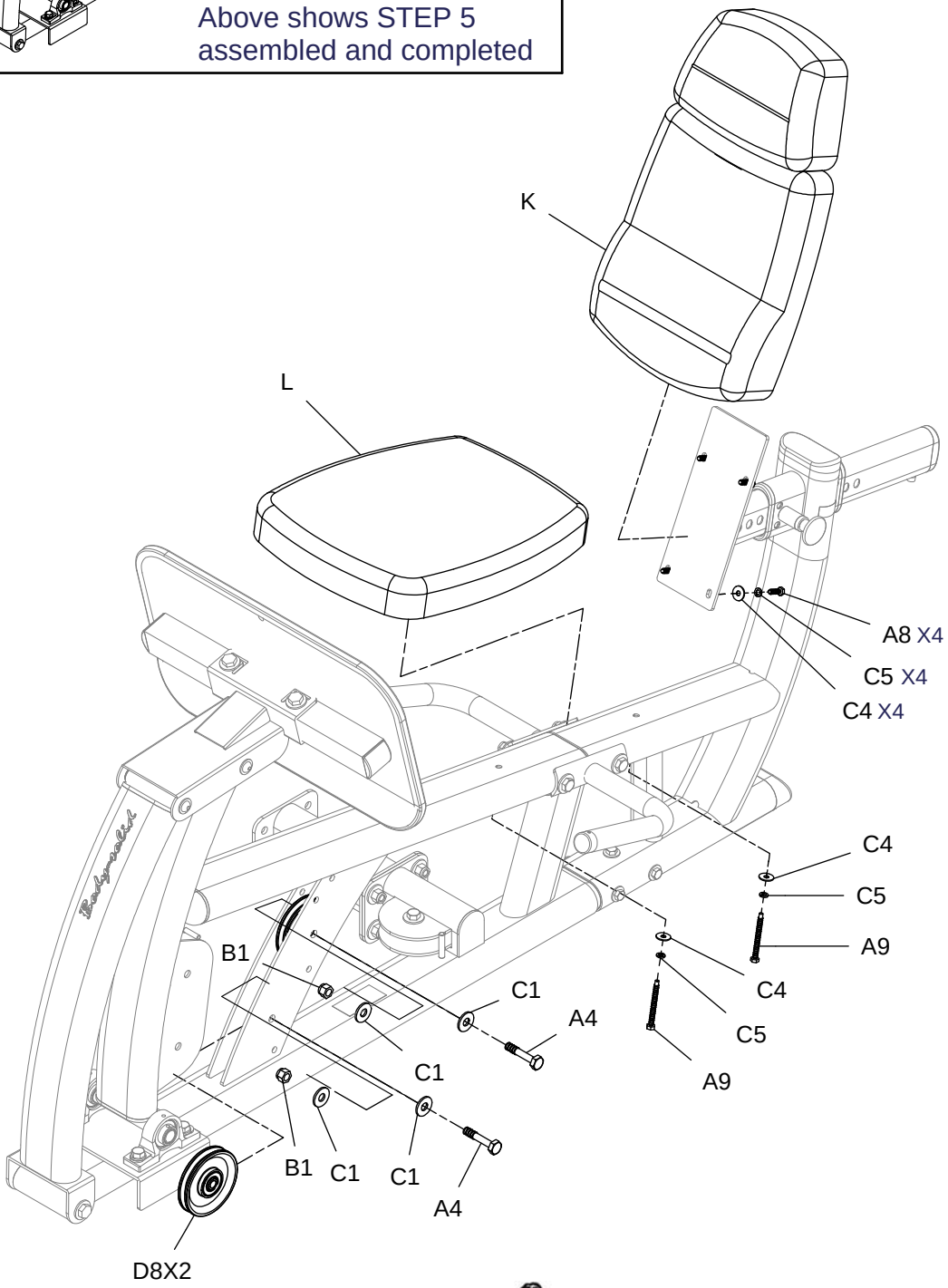

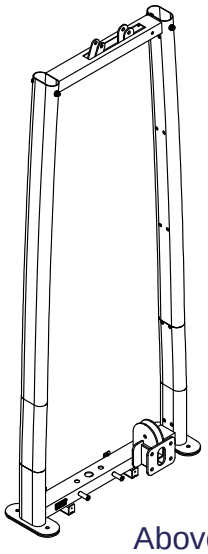

Above shows STEP 6
assembled and completed

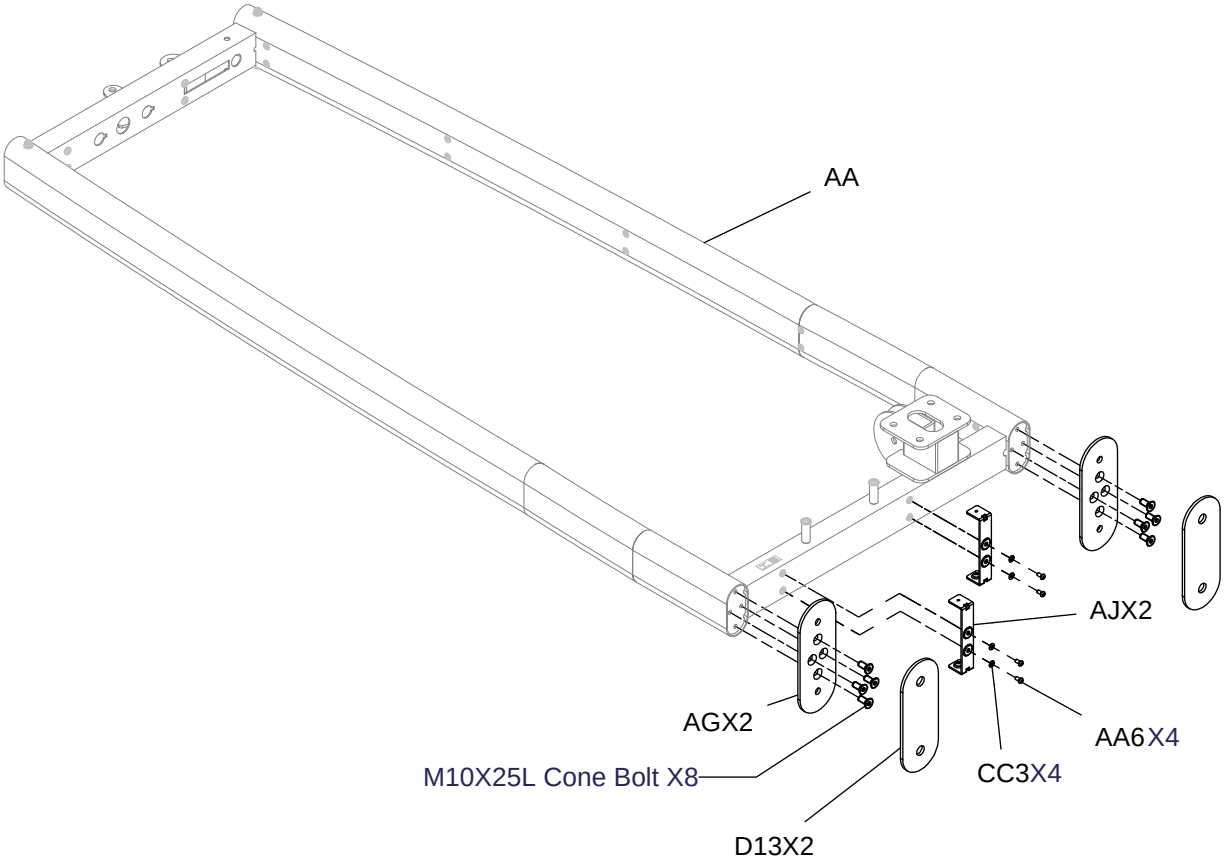

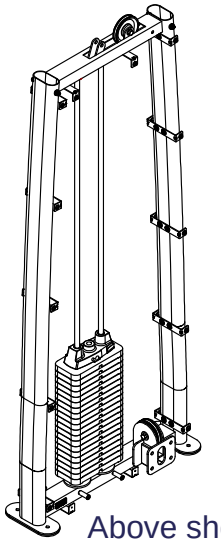

Above shows STEP 7
assembled and completed

NOTE : FINGER TIGHTEN
PULLEY FASTENERS
PULLEYS WILL BE
REMOVED TO INSTALL CABLE

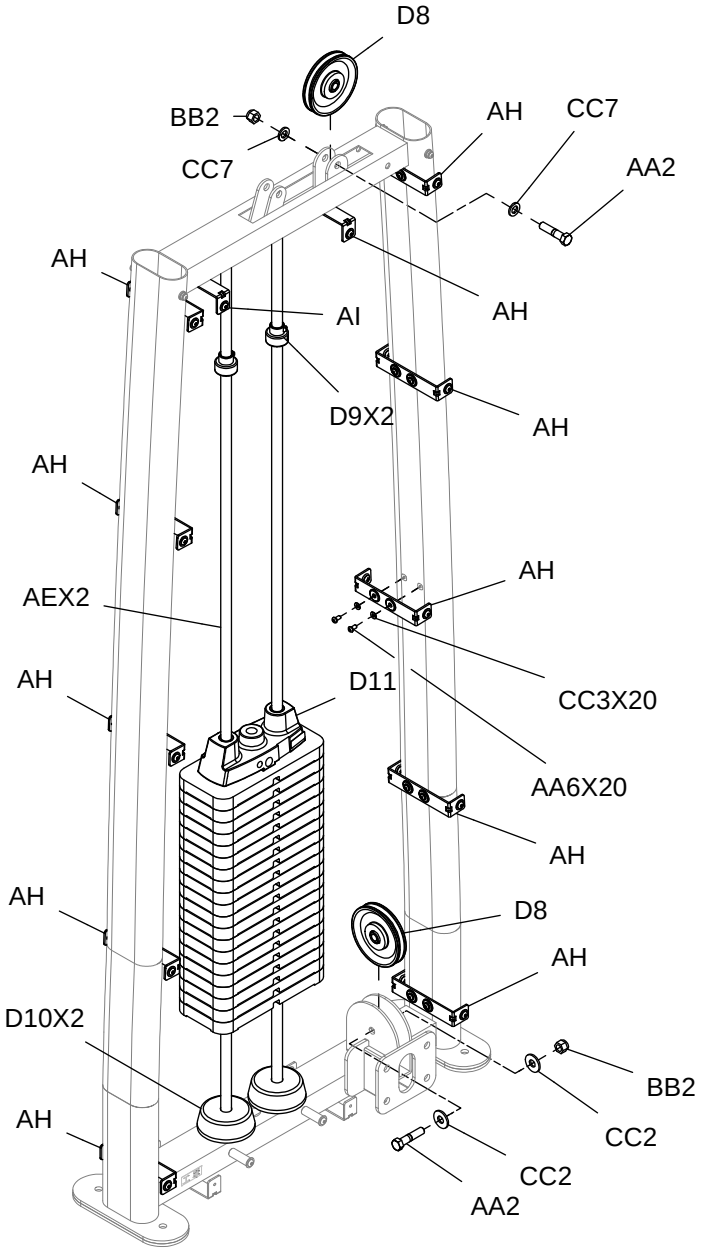

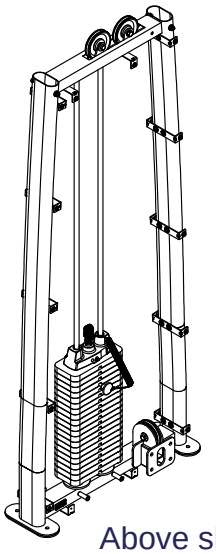

Above shows STEP 8
assembled and completed

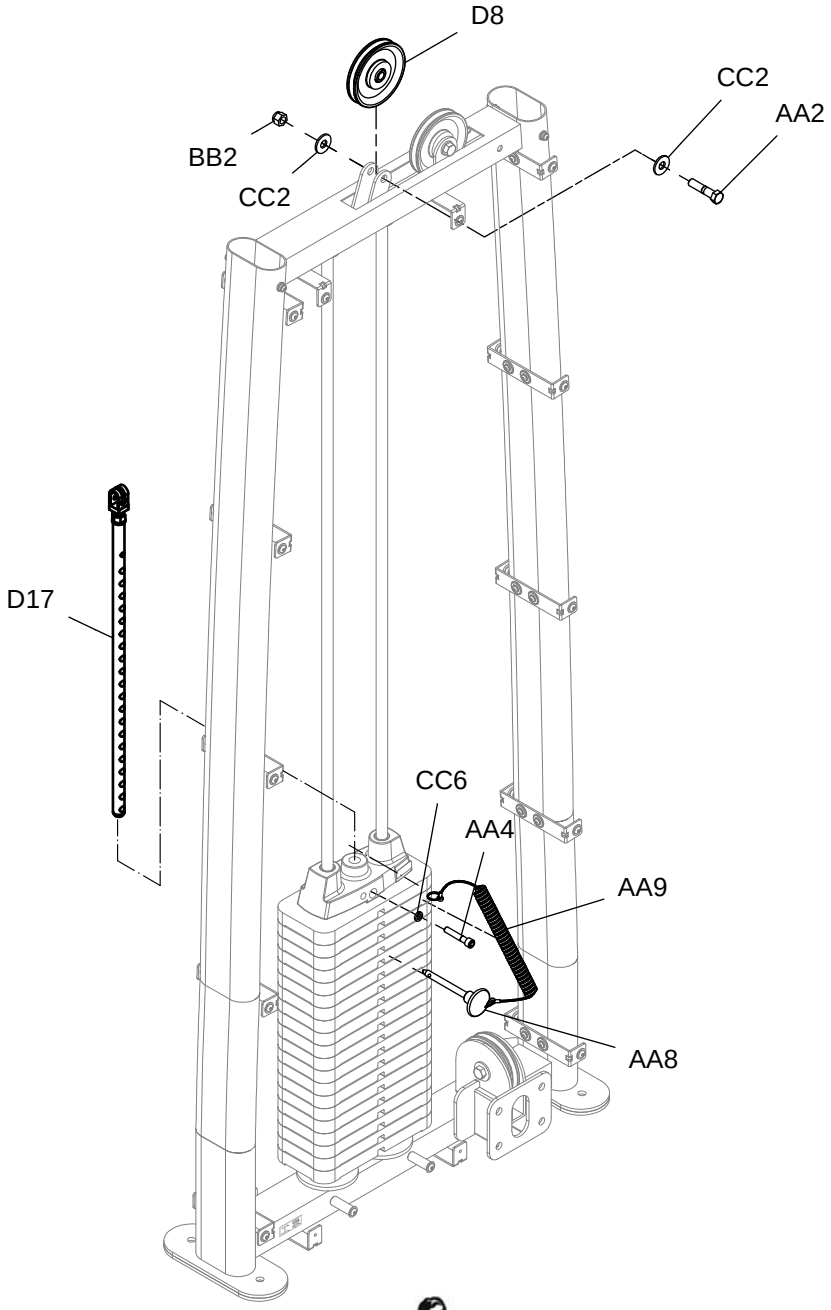

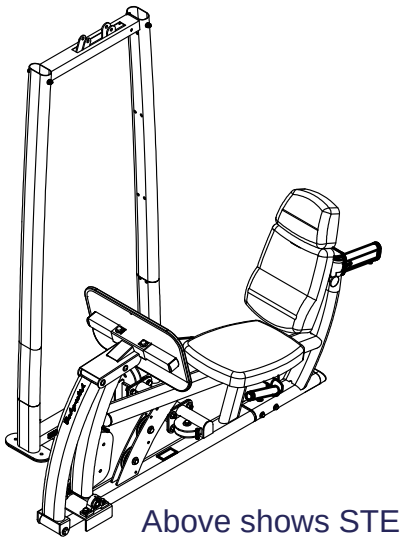

Above shows STEP 9
assembled and completed

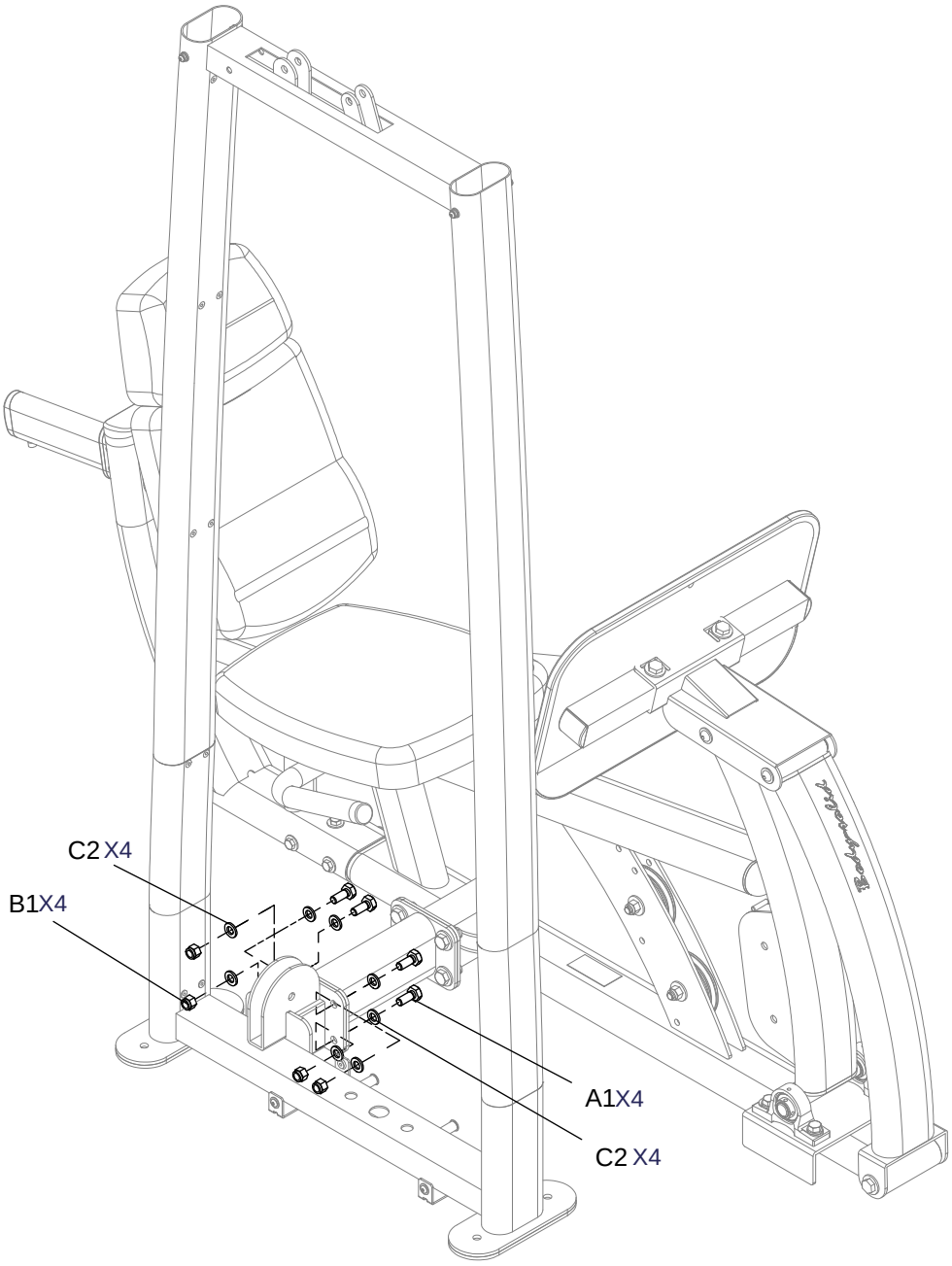

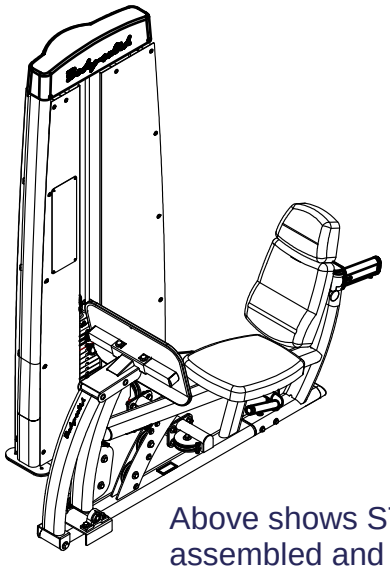

Above shows STEP 10 assembled and completed

D14.

D15.

Detail View

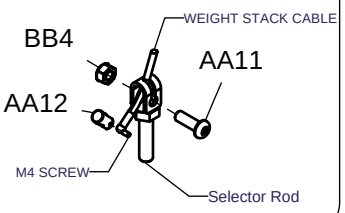

Detail View

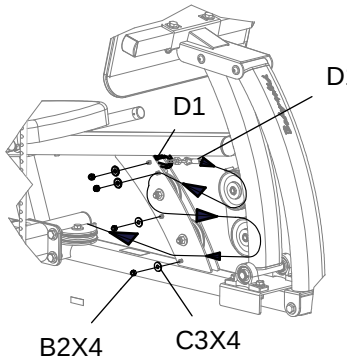

BB3
BB2
CC1
CC2
BB4
CC8
CC1
AA5
D8
CC2
AA2
N1
CC8
AA13
D15
1/2"x1-3/4"L HEX Bolt
1/2" Washer
C3
A7
C3
A7
C3
A7
C3
A7
D8X3
A3X2
B1X2
C1X2
C1X2

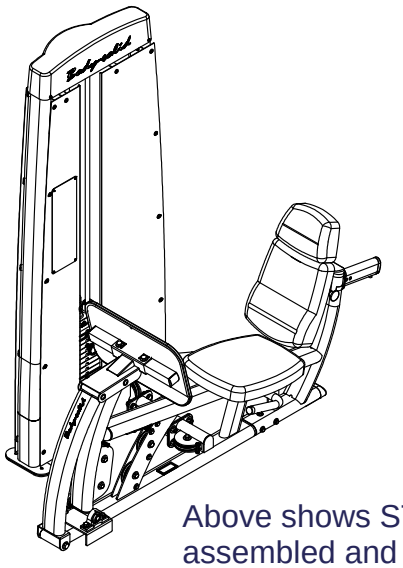

Above shows STEP 11
assembled and completed

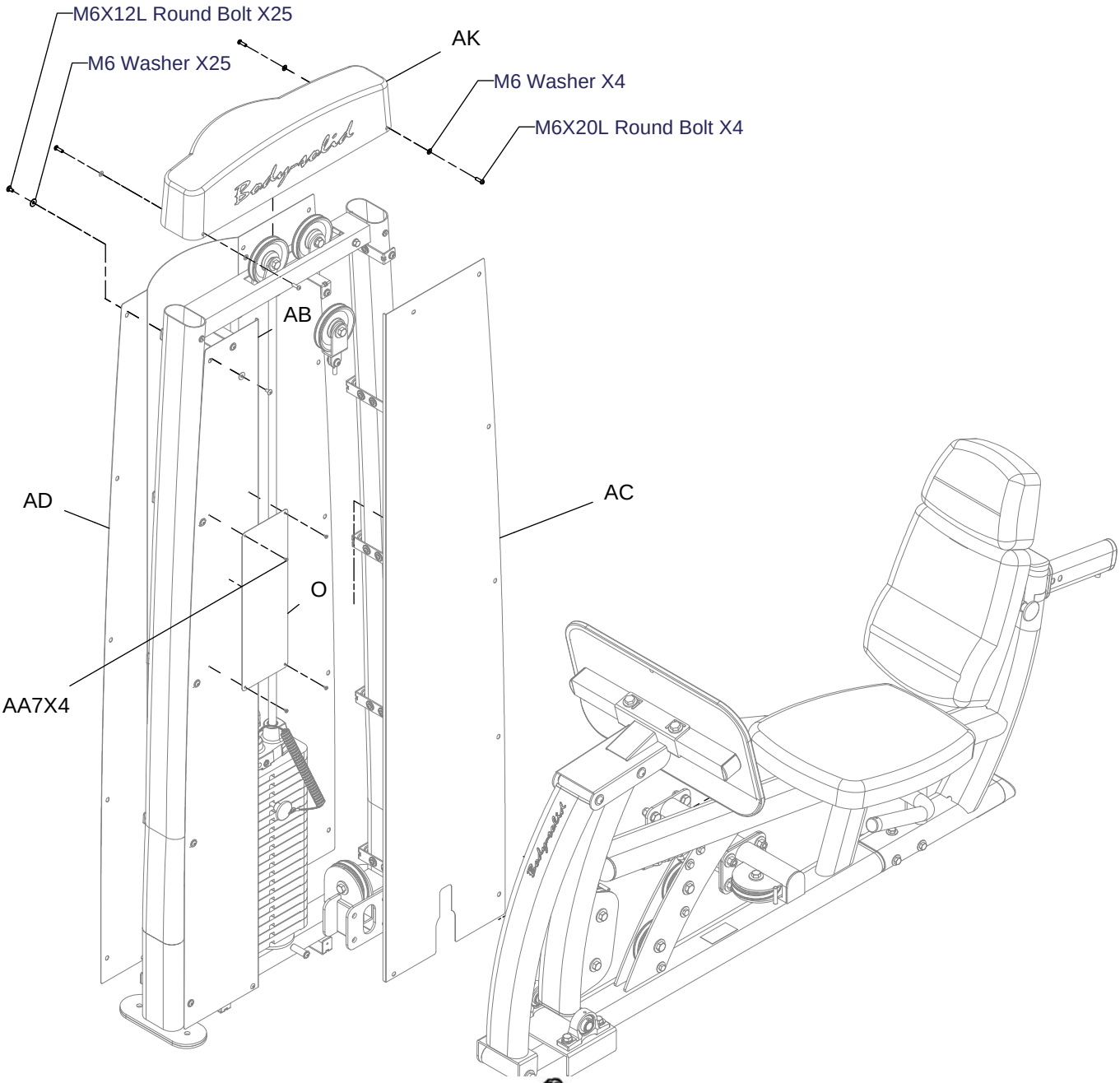

Cable to match illustration

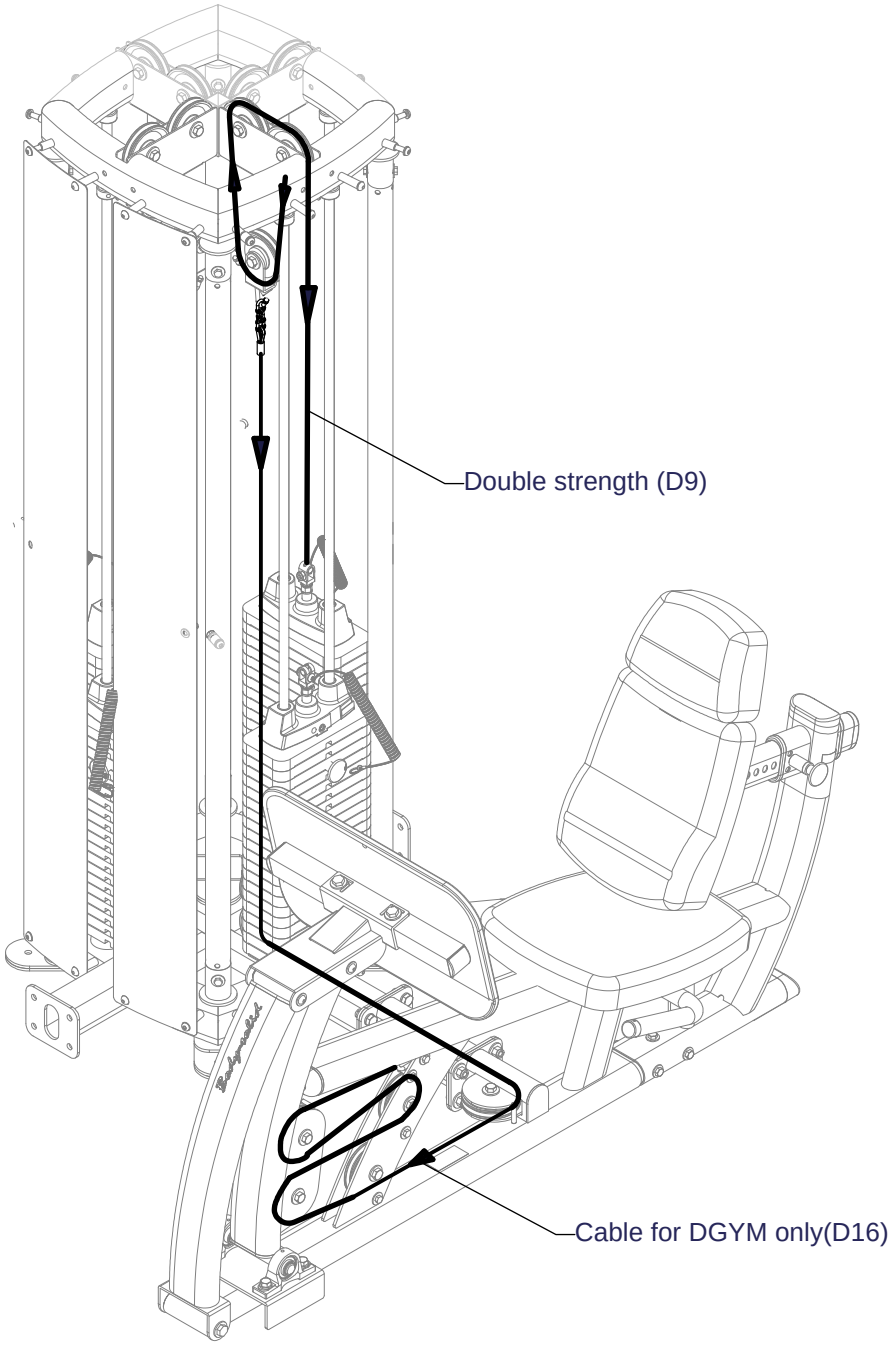

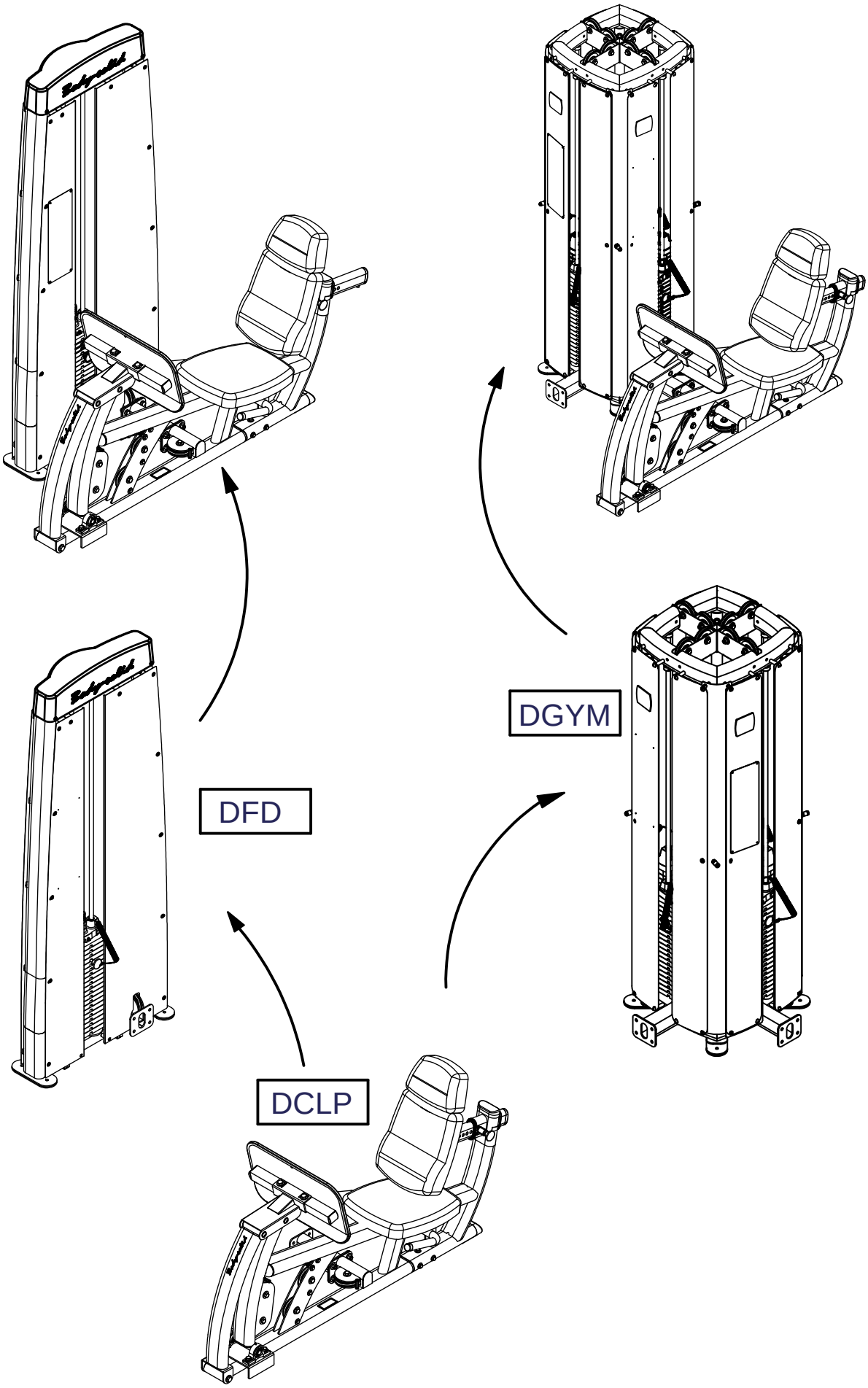
DGYM
DFD
DCLP

Anti-cable Break Up Supplement Page
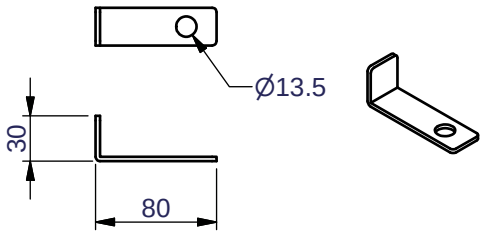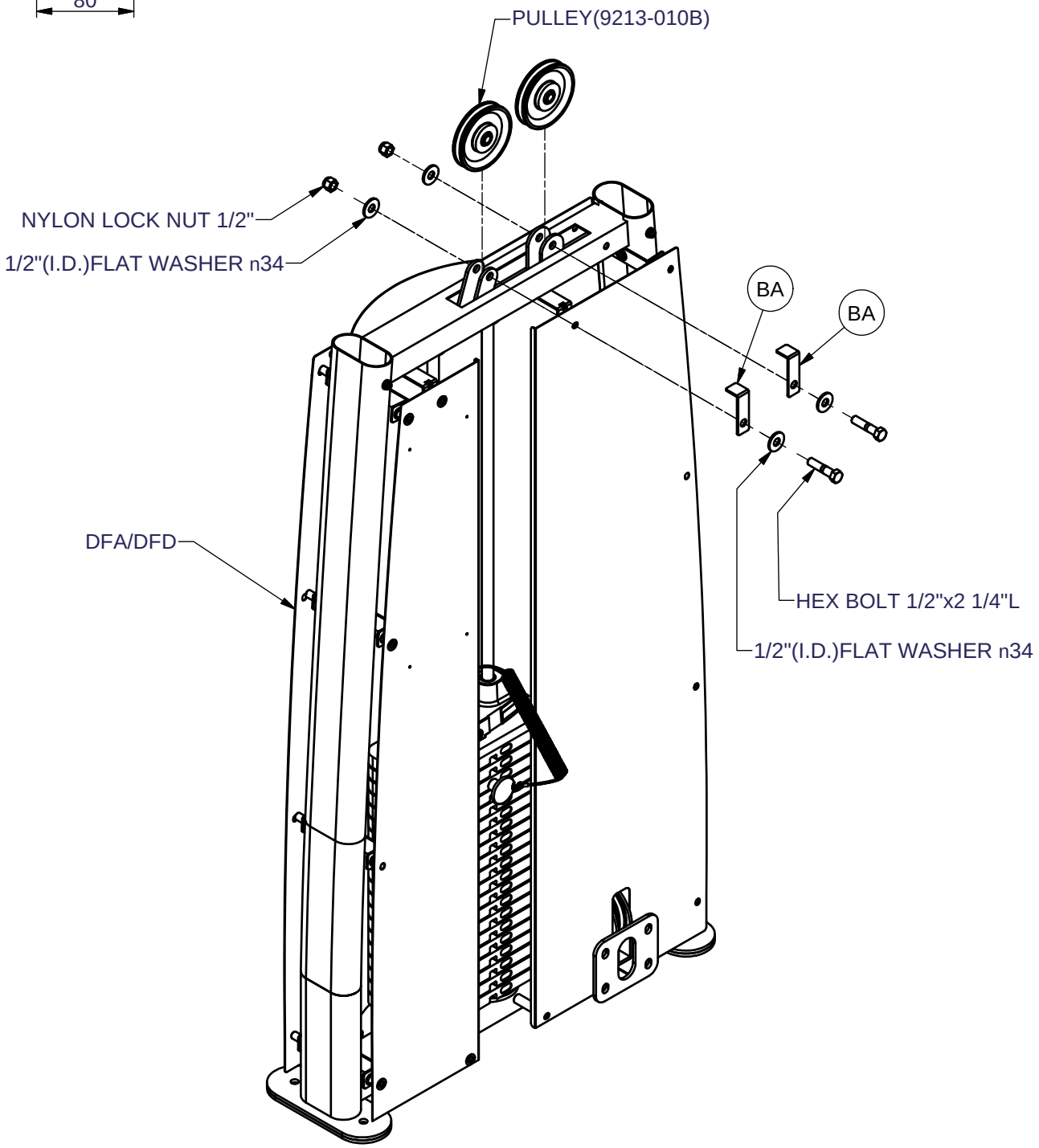
BA[2PCS]
8331-015