Body-Solid

Art.Nr. 1332201
1332214

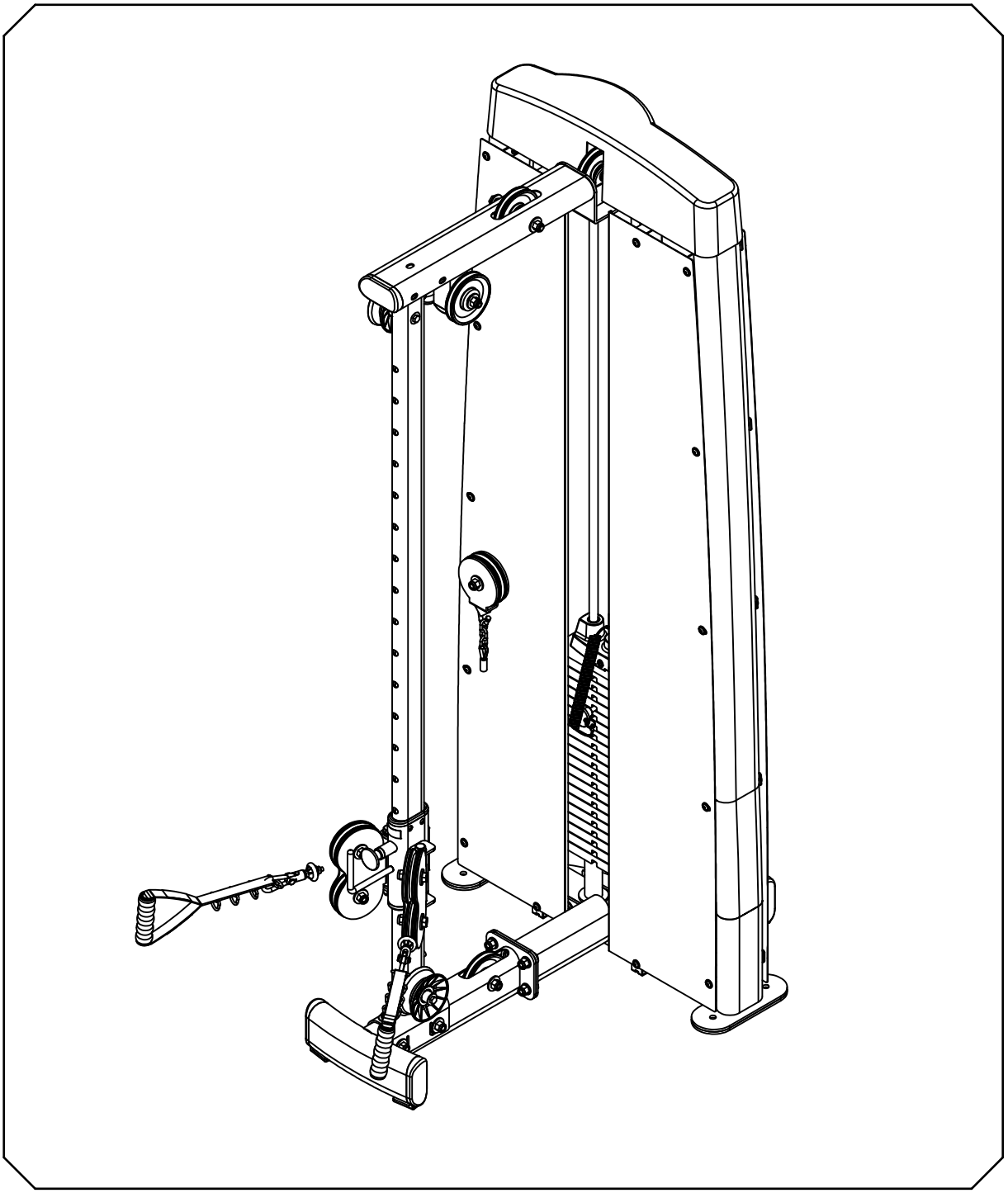

BODY-SOLID,Inc.
1900 S. Des Plaines Ave.
Forest Park, IL 60130 USA
Phone:(708)427-3555
Fax:(708)427-3556
www.bodysolid.com

DPCC.2 OWNER'S MANUAL

Warning, Safety & Maintenance

Be sure that all users carefully read and understand all warning, safety and maintenance labels on the machine before each use. Failure to do so may result in death or serious injury.

It is imperative that you retain your Owner's Manual and be sure all warning labels are legible and intact. Replacement Owner's Manuals and warning labels are available from your local Body-Solid dealer.

If you have any questions about the operation, set up or maintenance of this machine please call our customer service department at 1 (800) 556-3113.

THERE IS A RISK ASSUMED BY INDIVIDUALS WHO USE THIS TYPE OF EQUIPMENT. TO MINIMIZE RISK, YOU MUST FOLLOW THESE RULES:

1. Inspect equipment before each workout. Check that all nuts, bolts, screws and pop pins are in place and fully tightened. Also, before use, check cables for signs of wear. Replace all worn parts immediately. Never use machine if any parts are damaged or missing. **FAILURE TO FOLLOW THESE RULES MAY RESULT IN SERIOUS INJURY.**
2. Keep clear of the cables and all moving parts when the machine is in use.
3. Always make sure all Snap Links are closed when doing any cable/pulley/strap exercises.
4. Exercise with care. Perform your exercises at a smooth moderate pace; never perform jerky or uncoordinated movements that may cause injury.
5. It is recommended that you should workout with a training partner.
6. Do not allow children or minors to play on or around this equipment.
7. If unsure of proper use of equipment, call your local Body-Solid distributor or the Body-Solid customer service department at 1-800-556-3113.
8. WARNING: Consult your physician before starting your exercise program. For your own safety, do not begin any exercise program without proper instruction. RAL8-6-03 WC-54

WARNING

Safety and Maintenance of Cables

IMPORTANT: Cables are wear items. It is your responsibility to prevent unexpected breakage. **Cable inspection should be performed daily.** Inspect all cables, the nylon coating on all cables, and the area near the fitting at each end of each cable. **Replace any damaged or worn cable immediately.** Do not allow the machine to be used until damaged or worn cables are replaced. Using or allowing a machine to be used with a suspect cable can result in serious injury. See Owner's Manual for more information.

For Body-Solid Customer Service
Call 1-800-556-3113

MAINTENANCE SCHEDULE

Check the function and integrity of the following components. As noted, Inspect equipment before each workout. Replace all damaged, broken or worn components immediately.

		DAILY	WEEKLY
Cables:	Check tension, end fittings, and coating	✓	
	Check that locking nut at weight stack is tight		✓
Upholstery:	Wipe down and dry	✓	
	Clean and condition		✓
Frame:	Wipe down and dry	✓	
	Polish / Wax		✓
Chrome:	Wipe down and dry	✓	
	Polish / Lubricate		✓
Nuts / Bolts / Fasteners: Tighten and / or adjust as needed			✓
Guide Rods: Lubricate and clean			✓
Linear Rods: Lubricate and clean			✓
Seat Sleeves: Lubricate and clean			✓
Adjustments / Locking Pins / Tightening Knobs			✓
Weight Stack Pins			✓
Warning Instruction Labels			✓
Springs / Pop Pins		✓	
Anti Skid Surfaces			✓
Hand Grips / Rollers			✓

For Body-Solid Customer Service
Call 1-800-556-3113
#MSSTKR0803

Important Safety Instructions

Before beginning any fitness program, you should obtain a complete physical examination from your physician.

Il est conseille de subir un examen medical complet avant d'entreprendre tout programme d'exercise.
Si vous avez des etourdissements ou des faiblesses, arretez les exercices immediatement.

Antes de comenzar cualquier programma de ejercicios, deberias tener un examen isico con su doctor.

When using exercise equipment, you should always take basic precautions, including the following:

- Read all instructions before using your machine. These instructions are written to ensure your safety and to protect the unit.
- **Do not remove any safety labels from the machine.**
- Do not allow children on or near the equipment.
- Use the equipment only for its intended purpose as described in this guide. Do not use accessory attachments that are not recommended by the manufacturer. Such attachments might cause injuries.
- Wear proper exercise clothing and shoes for your workout, no loose clothing.
- Keep hands, limbs, loose clothing, and long hair well out of the way of all moving parts.
- Use care when getting on or off the unit.
- Do not overexert yourself or work to exhaustion.
- If you feel any pain or abnormal symptoms, stop your workout immediately and consult your physician.
- Never operate unit when it has been dropped or damaged. Return the equipment to a service center for examination and repair.
- Never drop or insert objects into any opening in the equipment.
- **IMPORTANT:** Cables are wear items. It is your responsibility to prevent unexpected breakage. Cable inspection should be performed daily. Inspect all cables, and the area near the fitting at each end of each cable. Replace any damaged or worn cable immediately. Do not allow the machine to be used until these are replaced.
- Do not use the equipment outdoors or near water.

Personal Safety During Assembly

- Before beginning assembly, please take the time to read the instructions thoroughly.
- Read each step in the assembly instructions and follow the steps in sequence. Do not skip ahead. If you skip ahead, you may learn later that you have to disassemble components and that you may have damaged the equipment.
- Assemble and operate your machine on a solid, level surface. Locate the unit a few feet from the walls or furniture to provide easy access.

Your machine is designed for your enjoyment. By following these precautions and using common sense, you will have many safe and pleasurable hours of healthful exercise.

After assembly, you should check all functions to ensure correct operation. If you experience problems, first recheck the assembly instructions to locate any possible errors made during assembly. If you are unable to correct the problem, call the dealer from whom you purchased the machine or call **1-800-556-3113** for the dealer nearest you.

Obtaining Service

Please use your Owner's Manual to make sure that all parts have been included in your shipment. When ordering parts, you must use the part number and description from your Owner's Manual. Use only Body-Solid replacement parts when servicing this machine. Failure to do so will void your warranty and could result in personal injury.

For information about product operation or service, check out the official Body-Solid website at www.bodysolid.com or contact an authorized Body-Solid dealer or a Body-Solid factory-authorized service company or contact Body-Solid customer service at one of the following:

Toll Free: 1-800-556-3113
Phone: 1-708-427-3555
Fax: 1-708-427-3556
Hours: M-F 8:30-5:00 CST
E-Mail: service@bodysolid.com

Or write to: Body-Solid, Inc.
Service Department
1900 S. Des Plaines Ave.
Forest Park, IL 60130 USA

Retain this Owner's Manual for future reference. If you need to order replacement parts please be prepared to provide the following information when contacting us so that we can assist you better.

1. **Model Number**
2. **Proof of Purchase**
3. **Place of Purchase**
4. **Serial Number (S/N)**
5. **Part # and Description**

HARDWARW ILLUSTRATION

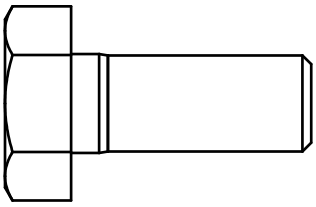

(A1)HEX BOLT 1/2"X1-1/4"L PARTIAL QTY.4

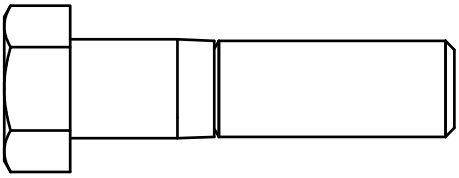

(A2)HEX BOLT 1/2"X2"L PARTIAL QTY.4

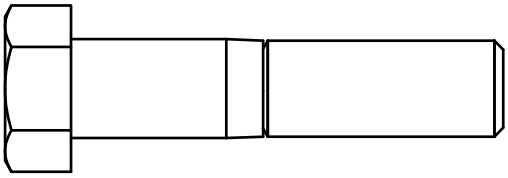

(A3)HEX BOLT 1/2"X2-1/4"L PARTIAL QTY.1

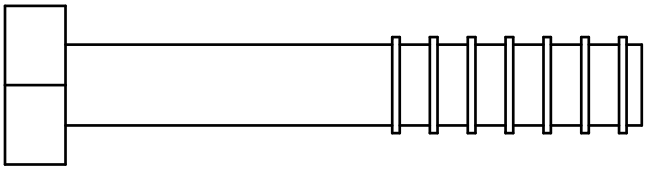

(A4)HEX BOLT 1/2"X3"L PARTIAL QTY.1

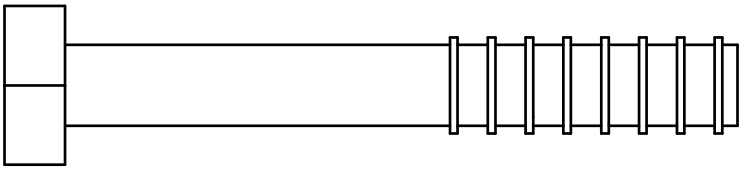

(A5)HEX BOLT 1/2"X3-1/2"L PARTIAL QTY.2

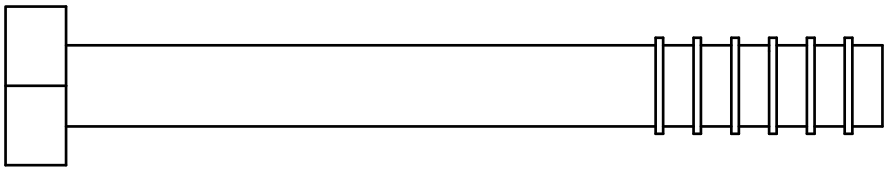

(A6)HEX BOLT 1/2"X4-1/4"L PARTIAL QTY.2

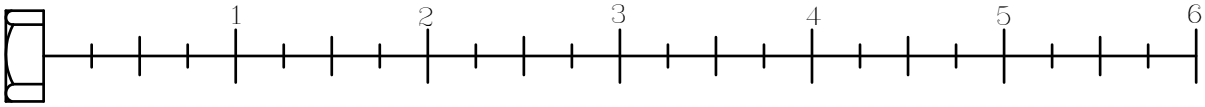

HARDWARW ILLUSTRATION

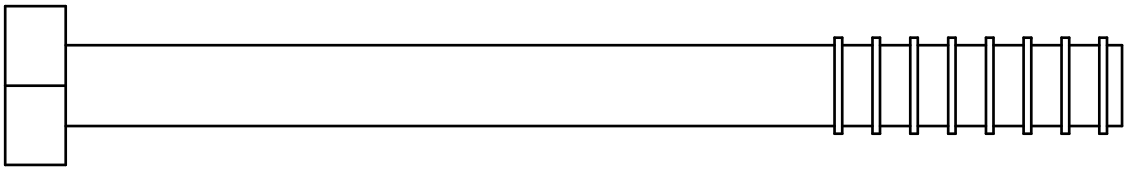

(A7)HEX BOLT 1/2"X5-1/2"L PARTIAL QTY.1

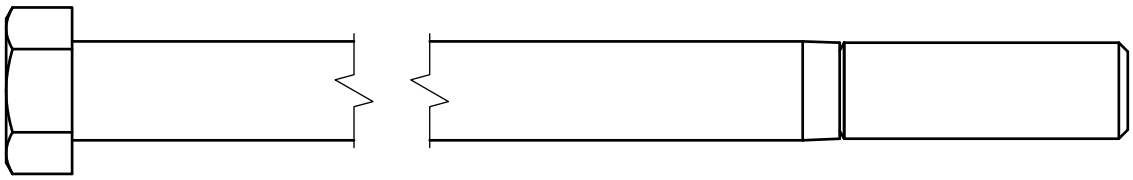

(A8)HEX BOLT 1/2"X6-1/2"L PARTIAL QTY.2

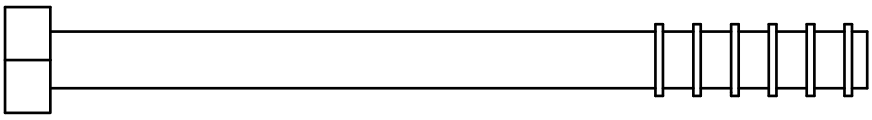

(A9)HEX BOLT 3/8"X4-1/4"L PARTIAL QTY.1

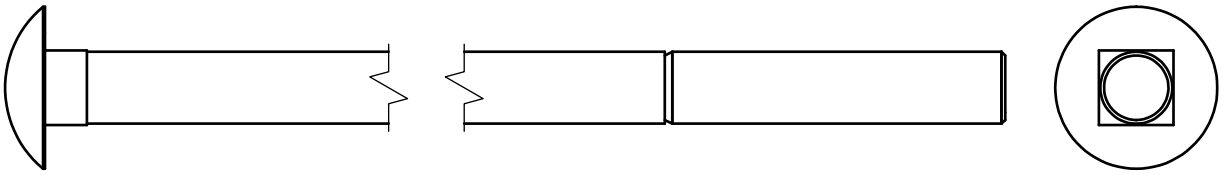

(A10)ROUND ALLEN HEAD 3/8"X5"-1/4"L PARTIAL QTY.2

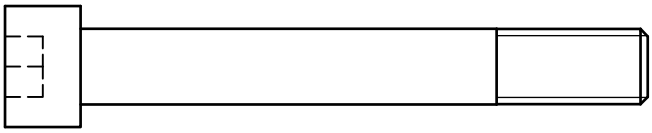

(A11)ROUND ALLEN HEAD M10X75L PARTIAL THREAD QTY.2

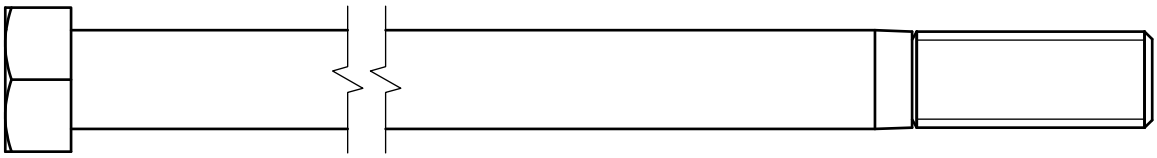

(A12)HEX BOLT 1/2"X6-1/4"L PARTIAL QTY.1

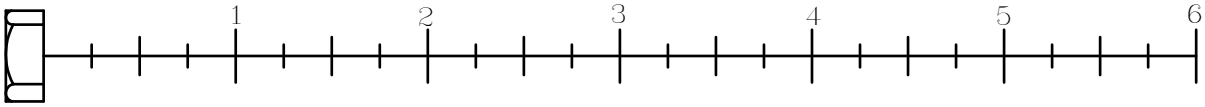

HARDWARW ILLUSTRATION

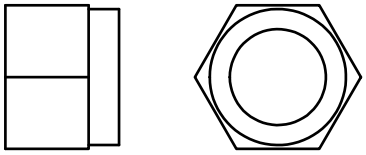

(B1)NYLON LOCK NUT1/2" QTY.18

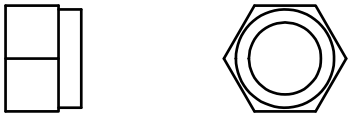

(B2)NYLON LOCK NUT 3/8" QTY.3

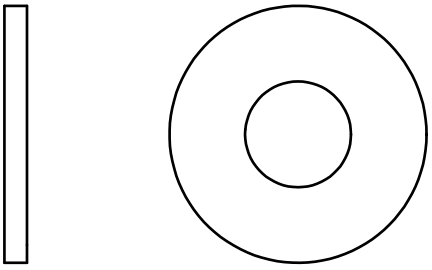

(C1)1/2"(I.D.)FLAT WASHER Ø34 QTY.24

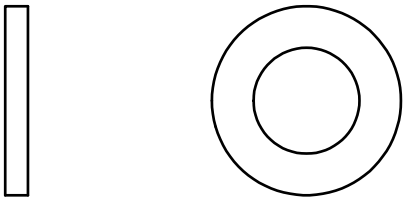

(C2)1/2"(I.D.)FLAT WASHER Ø25 QTY.12

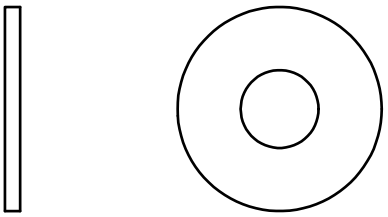

(C3)3/8"(I.D.)FLAT WASHER Ø27 QTY.4

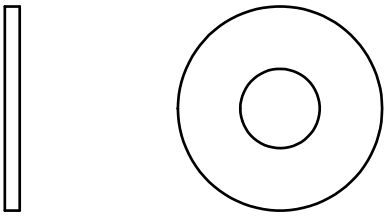

(C4)M10(I.D.)FLAT WASHER Ø27 QTY.2

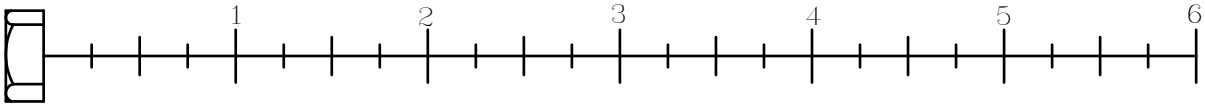

HARDWARW ILLUSTRATION

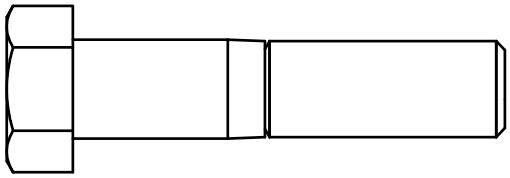

(AA2)HEX BOLT 1/2"X2-1/4"L PARTIAL QTY.1

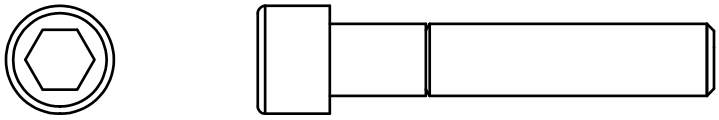

(AA4)ROUND INNER HEAD 3/8"X2"L PARTIAL QTY.1

(AA5)ROUND INNER HEX SCREW M6X20L PARTIAL QTY.24

(AA6)ROUND CROSS SCREW 5/32"X1/4"L PARTIAL QTY.4

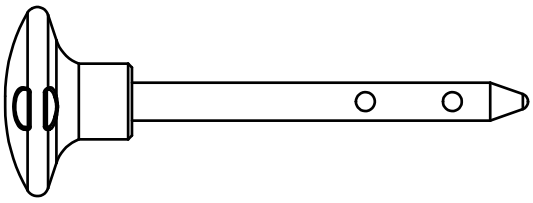

(AA7)10LB PIN(8250-071) QTY.1

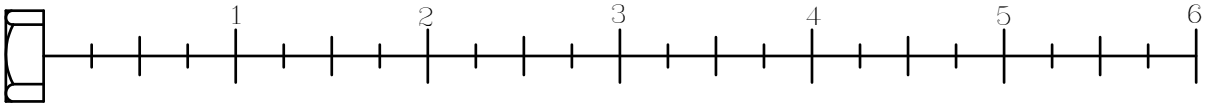

HARDWARW ILLUSTRATION

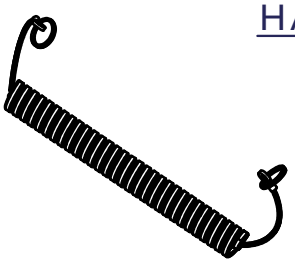

(AA8)ELASTIC BOLT QTY.1

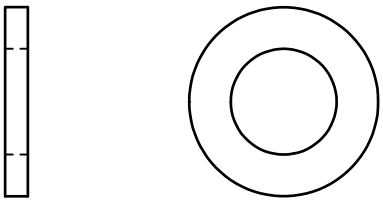

(CC1)1/2"(I.D.)FLAT WASHER Ø25 QTY.2

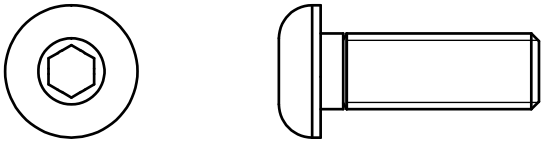

(AA10)ROUND INNER HEX SCREW
M10X30L PARTIAL QTY.1

(CC2)M6(I.D.)FLAT WASHER Ø13 QTY.24

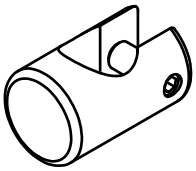

(AA11)FIRM SHEATH(8890-046) QTY.1

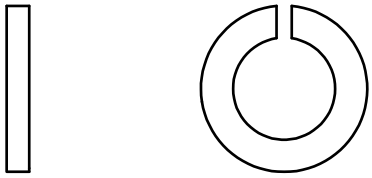

(CC4)SPRING WASHER 1/2" QTY.1

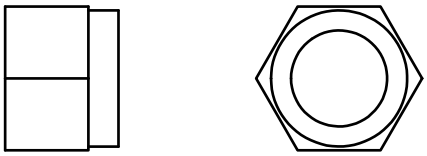

(BB2)NYLON LOCK NUT1/2" QTY.1

(CC5)SPRING WASHER 3/8" QTY.1

(BB3)NYLON LOCK NUT M10 QTY.1

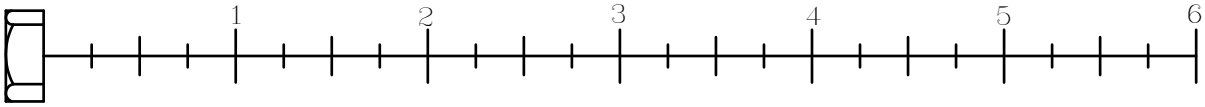

HARDWARW ILLUSTRATION

(D2)Ø3/4"X16L STEEL BUSHING(8110-066) ----------[4PCS]
(D3)Ø3/4"X45L STEEL BUSHING(8110-067) ----------[2PCS]
(D4)Ø8X80L SPRING SNAP LINK(8810-001) ----------[2PCS]
(D5)Ø3/4"SHAFT COLLAR(9211-046) ----------[2PCS]
(D6)□50X50X1.8t END CAP(9211-087) ---------- [1PCS]
(D7)50X100 NYLON BUSHING(9211-107) ---------- [2PCS]
(D8)58X116X2.5t FOOT CAP(9211-108) ---------- [4PCS]
(D9)58X116X2.5t END CAP(9211-112) ---------- [1PCS]
(D10)Ø4" PULLEY(9213-022A) ----------[2PCS]
(D11)Ø4 1/2" PULLEY(9213-010B) ---------- [10PCS]
(D12)Ø2-1/2"RUBBER DOUNT(9310-010) ---------- [2PCS]
(D13)95X250 RUBBER PAD(9310-060) ---------- [2PCS]
(D14)HANDLE(9630-125) ---------- [2PCS]
(D15)TOP PLATE(8400-006) ---------- [1PCS]
(D17)6845mm STEEL CABLE(FDPCCA)----------[1PCS]
(D18)4160mm STEEL CABLE(FDPCCB) ----------[1PCS]
(D19)DPCC FOR DGYM CABLE(FDPCCC)----------[1PCS]
(D20)WEIGHT SELECTOR BAR(8210-042B) ----------[1PCS]

D2

D3

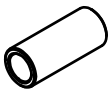

D4

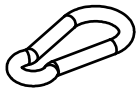

D5

D6

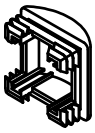

D7

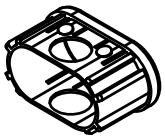

D8

D9

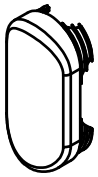

D10

D11

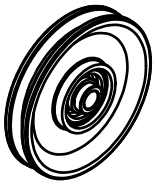

D12

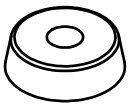

D13

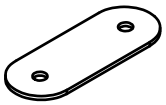

D14

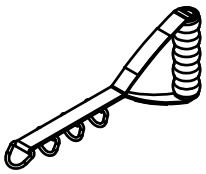

D15

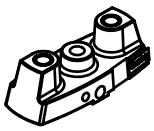

D17

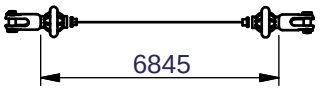

D18

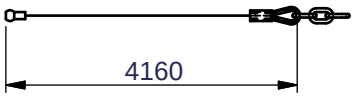

D19

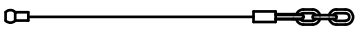

D20

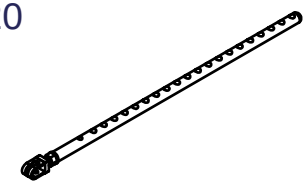

PARTS ILLUSTRATION

A [1PCS]

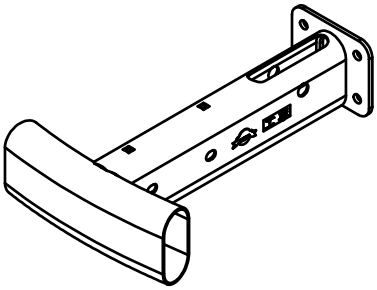

B [1PCS]

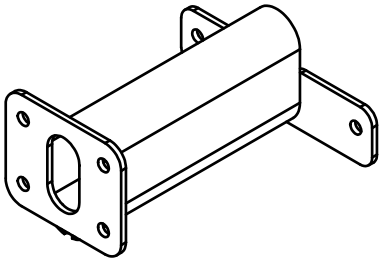

C [1PCS]

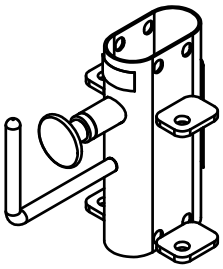

D [2PCS]

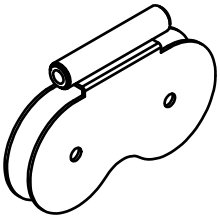

E[1PCS]

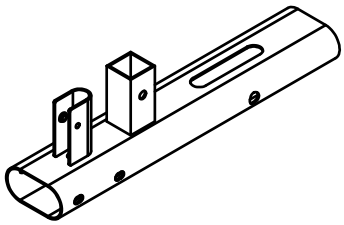

F [1PCS]

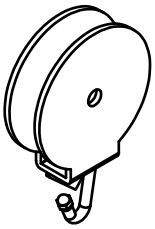

G[1PCS]

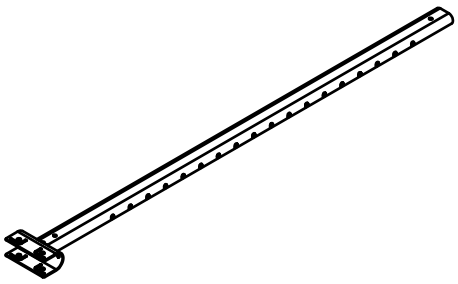

H [1PCS]

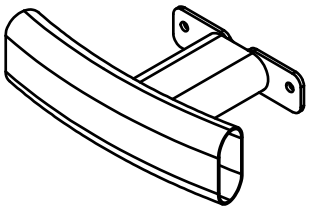

I [2PCS]

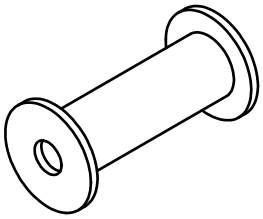

PARTS ILLUSTRATION

AA[1PCS]
6610-001

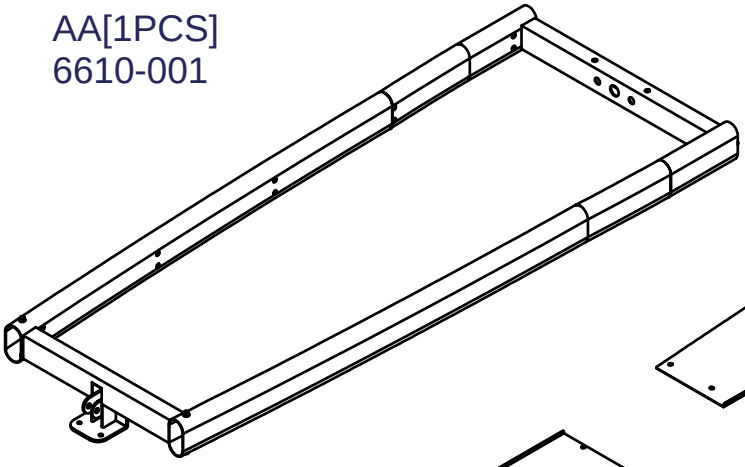

BB[1PCS]
8380-044

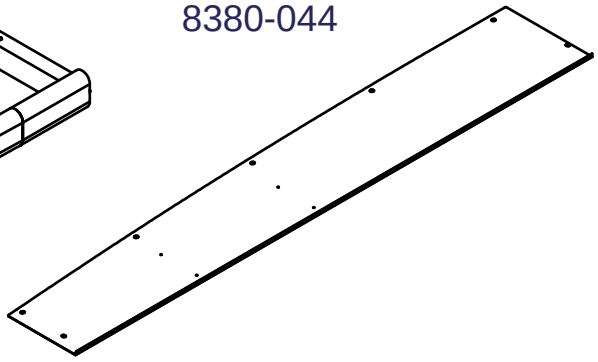

CC[1PCS]
8380-052

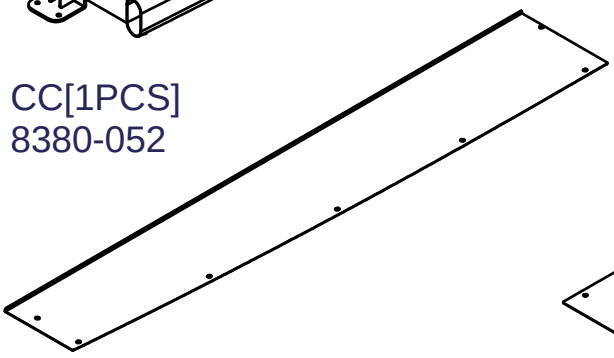

DD[1PCS]
8380-045

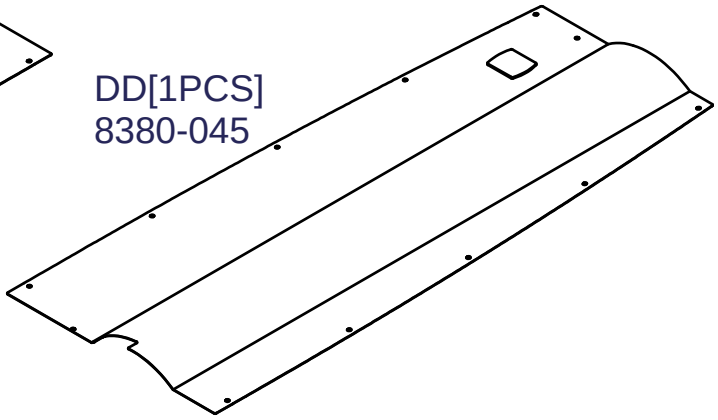

EE[2PCS]
Ø3/4"X1930L

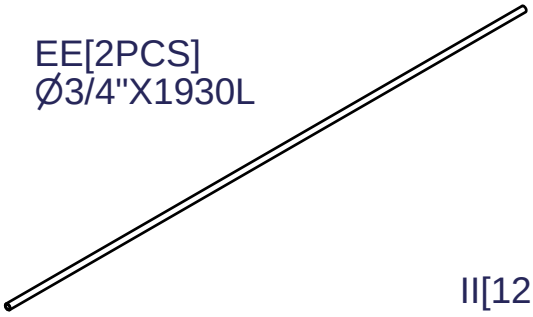

FF[1PCS]
9440-177

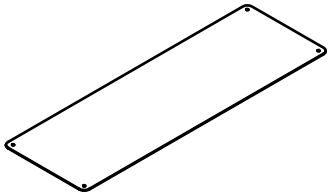

II[12PCS]
8321-040
both side

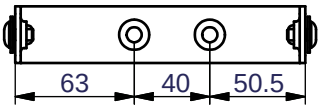

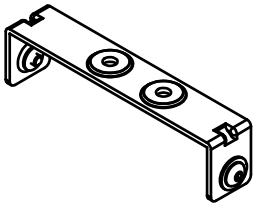

KK[1PCS]
9211-119A

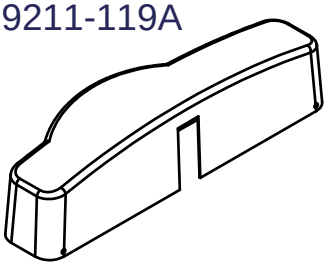

JJ[2PCS]
8321-040
one side

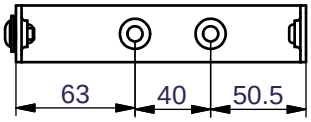

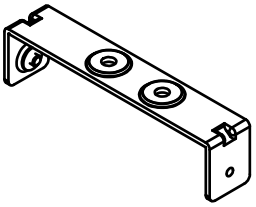

HH[2PCS]
8313-144

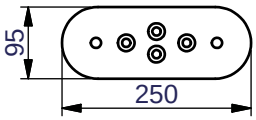

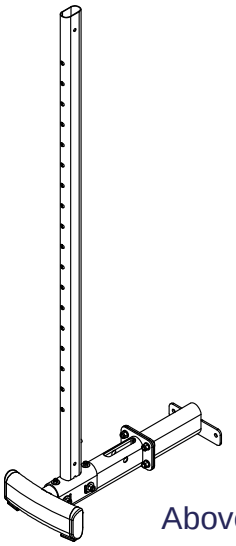

Above shows STEP1
assembled and completed

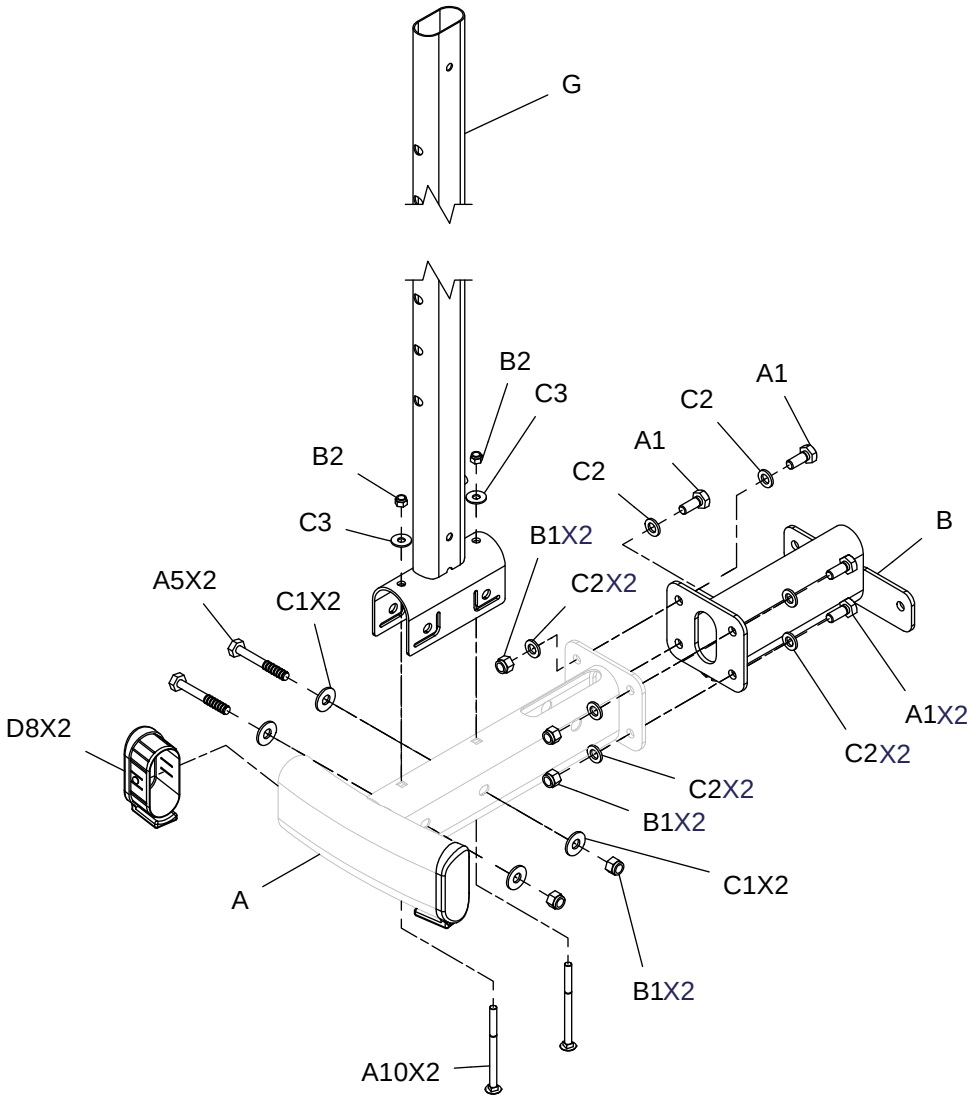

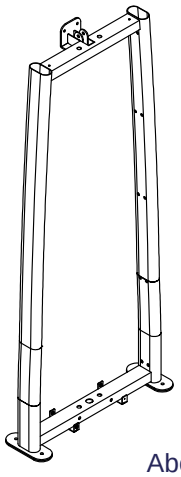

Above shows STEP 2 assembled and completed

DPCC single weight stack assembly instructions

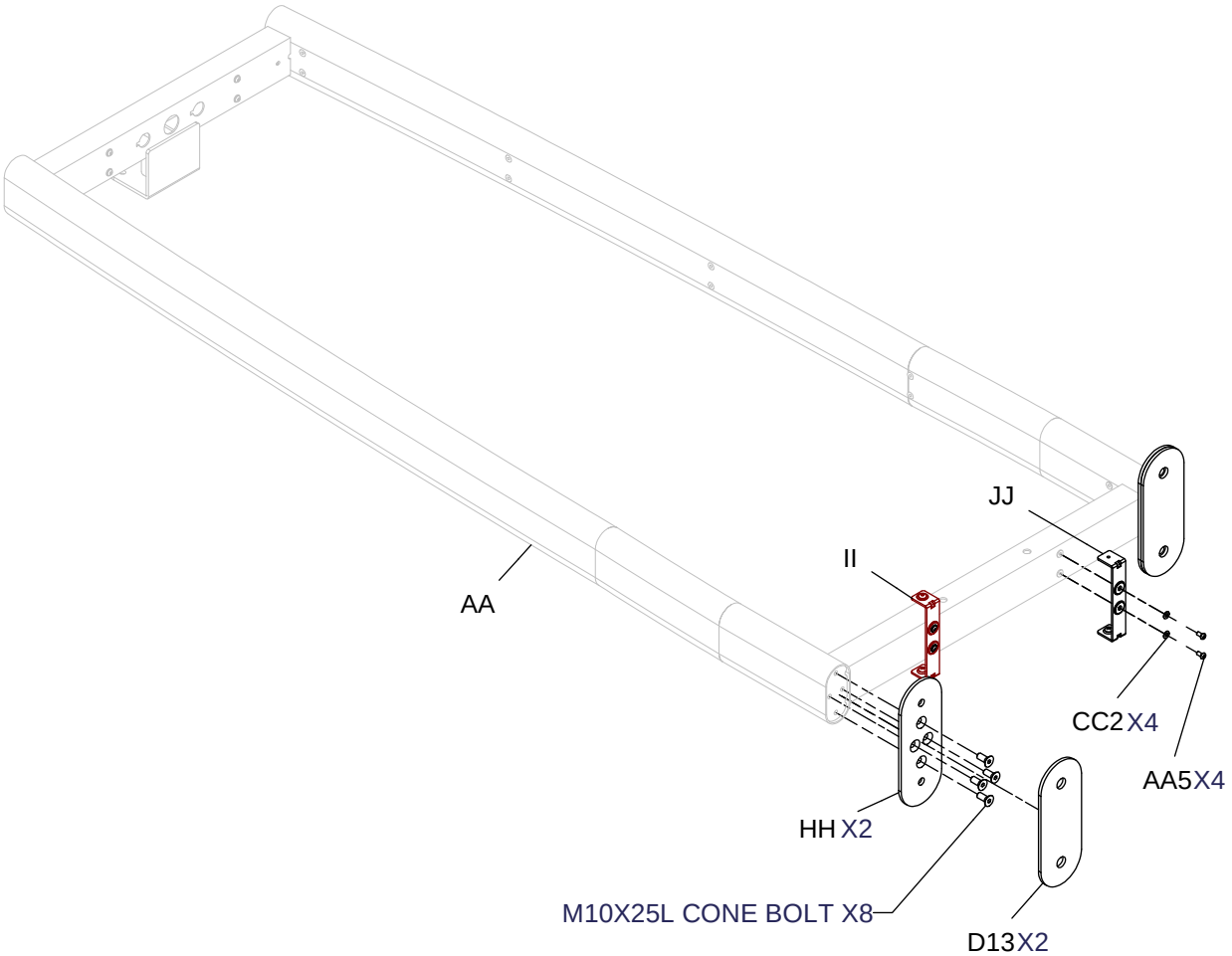

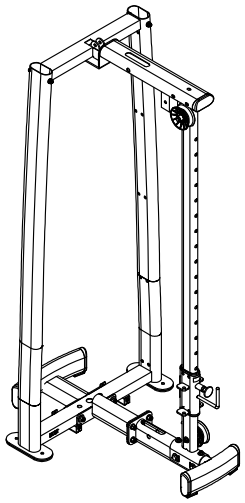

Above shows STEP 3
assembled and completed

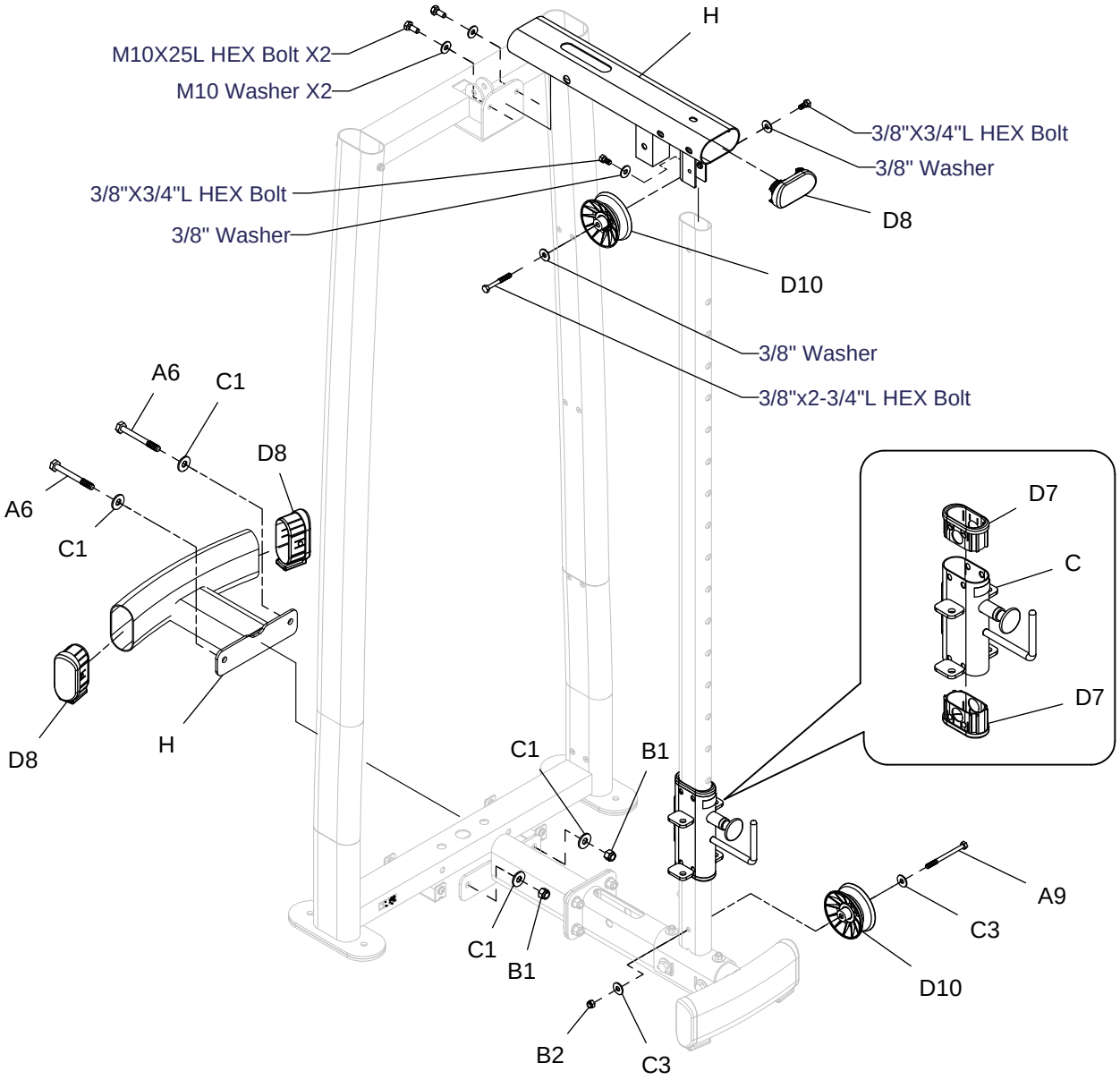

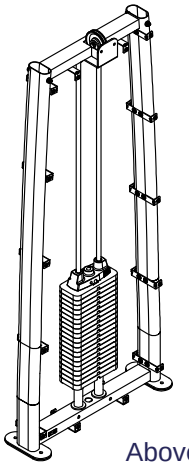

Above shows STEP 4
assembled and completed

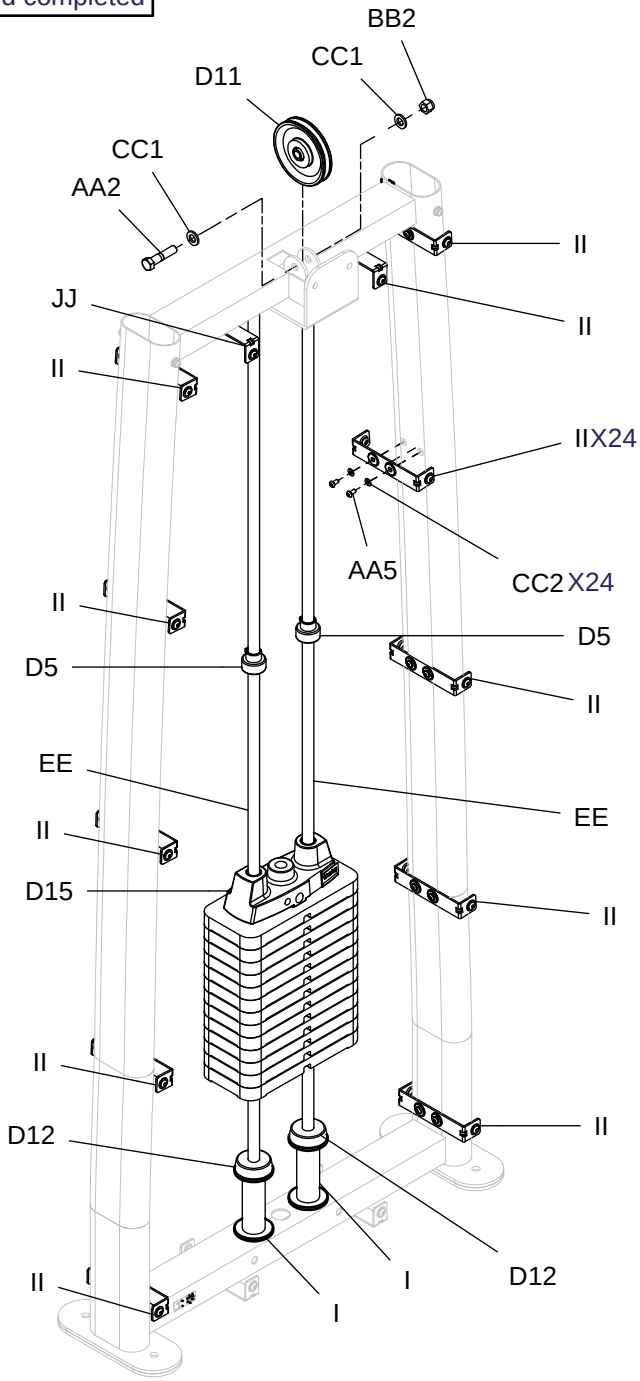

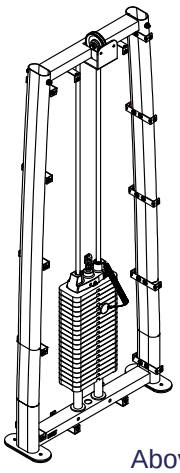

Above shows STEP 5
assembled and completed

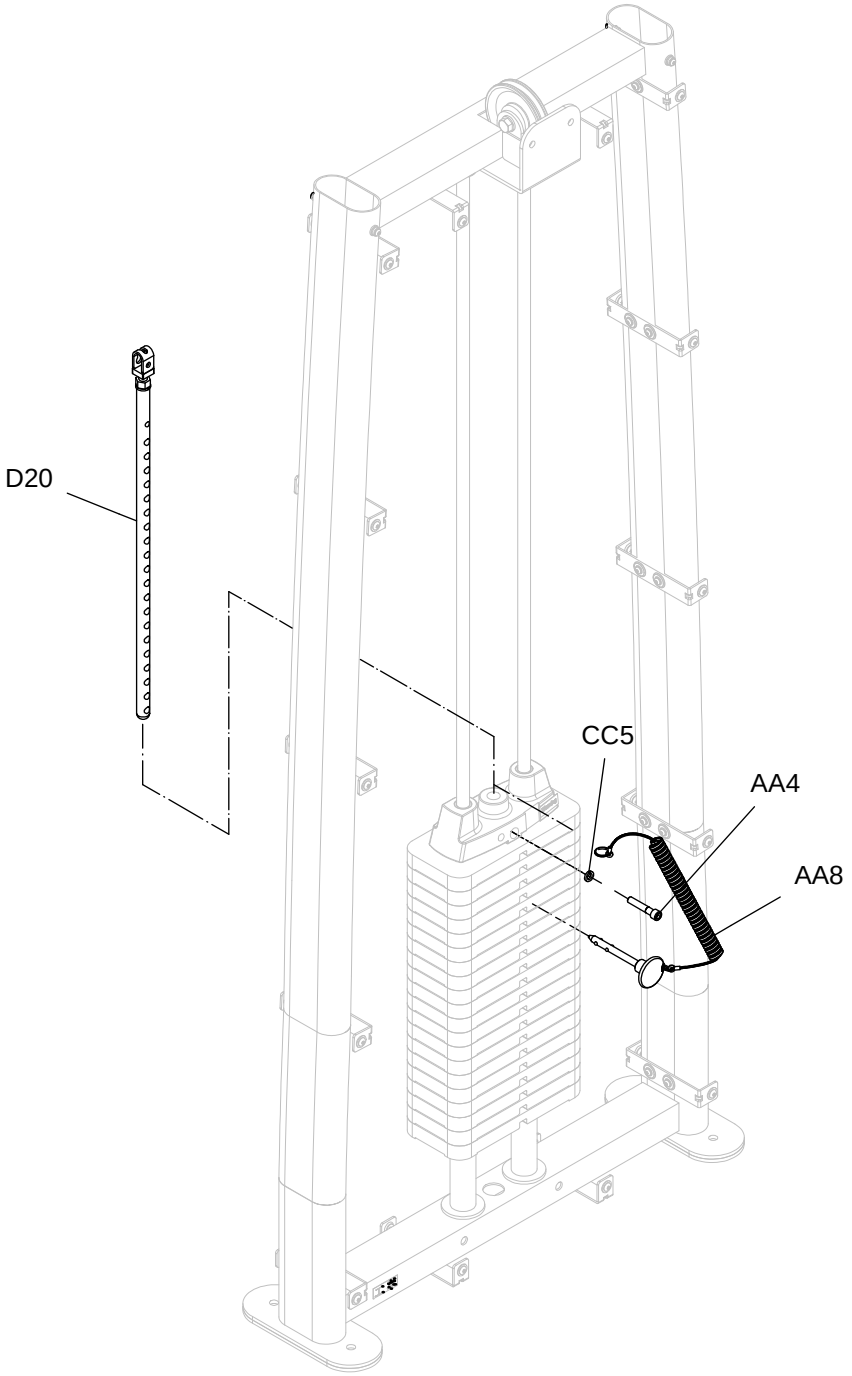

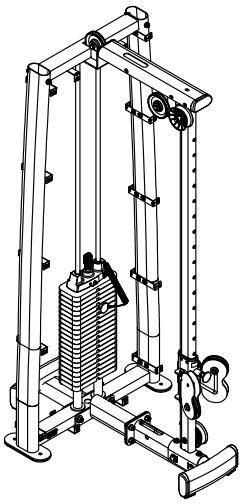

Above shows STEP 6
assembled and completed

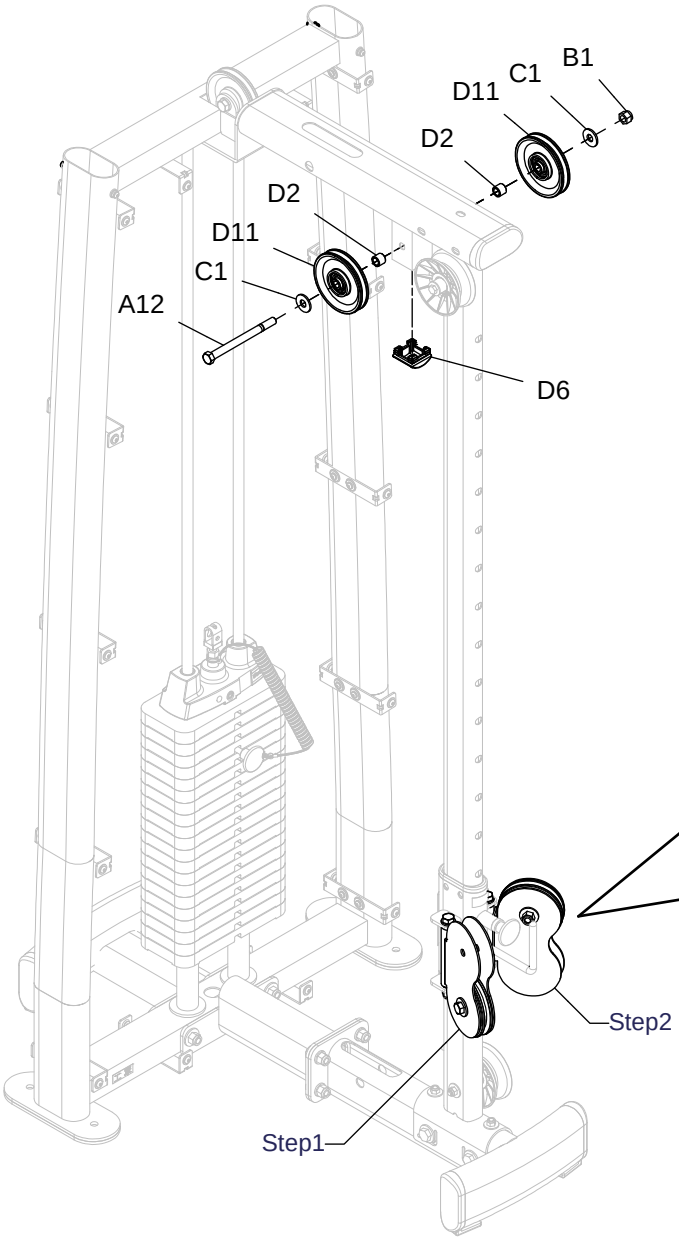

DETAIL VIEW

Step 1

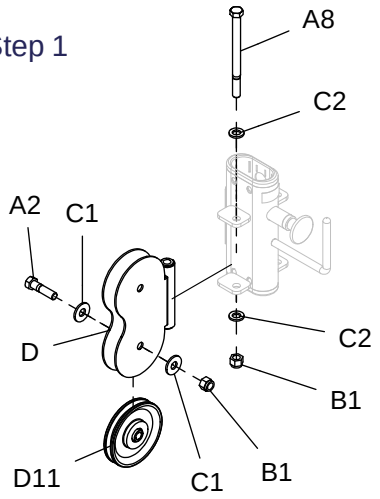

Step 2

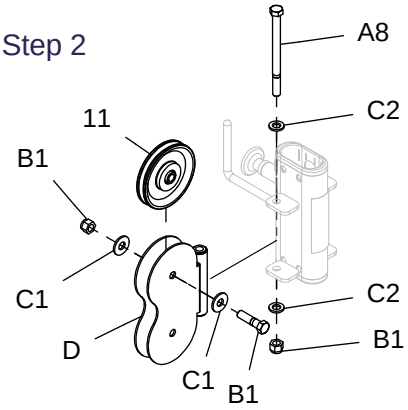

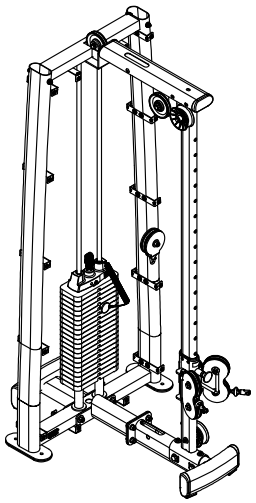

Above shows STEP 7
assembled and completed

D17.

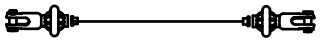

DETAIL VIEW

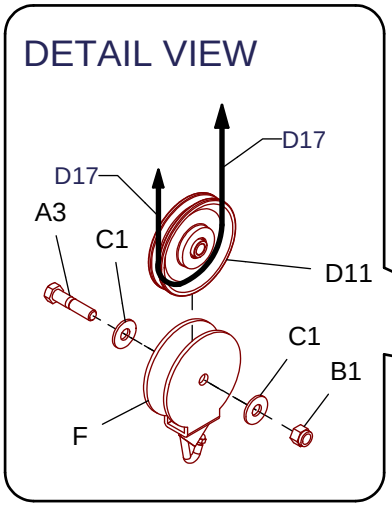

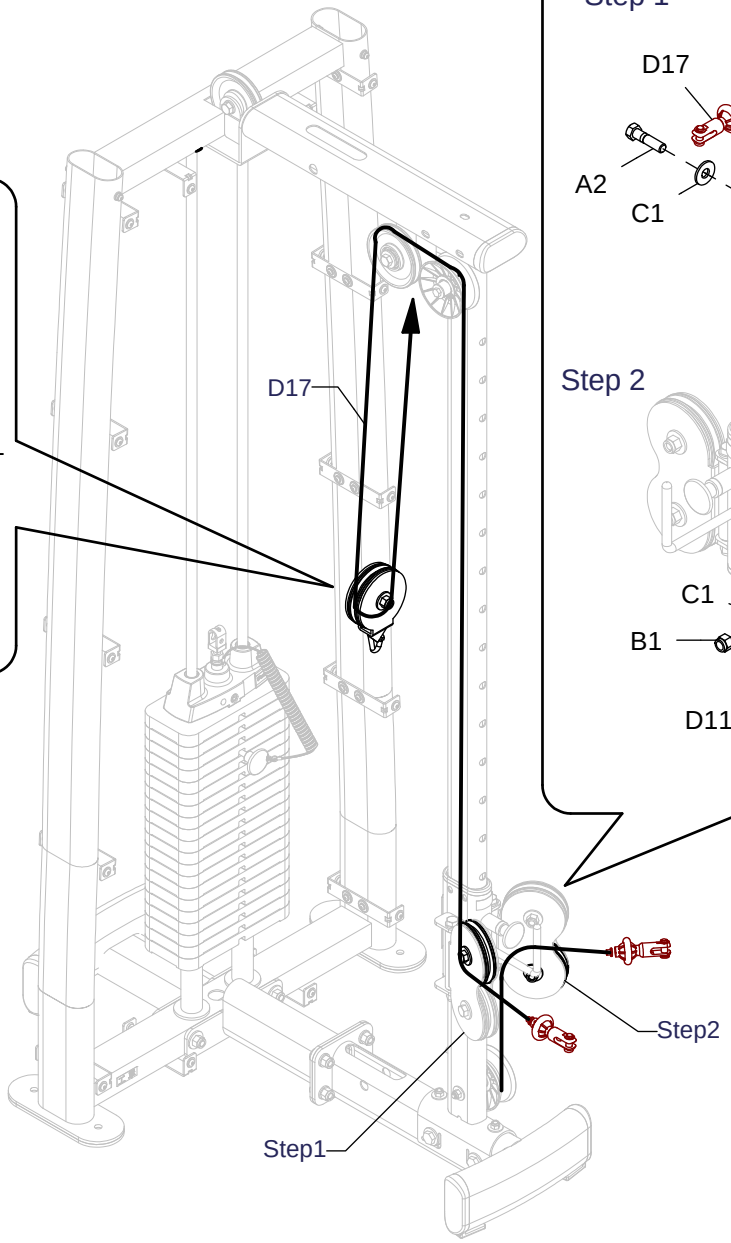

DETAIL VIEW

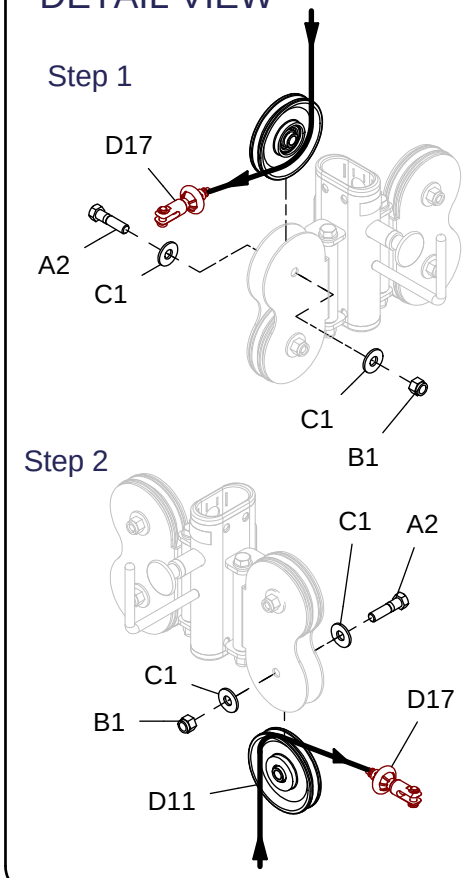

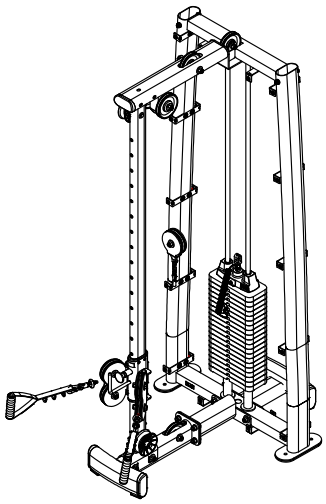

Above shows STEP 8
assembled and completed

D18.

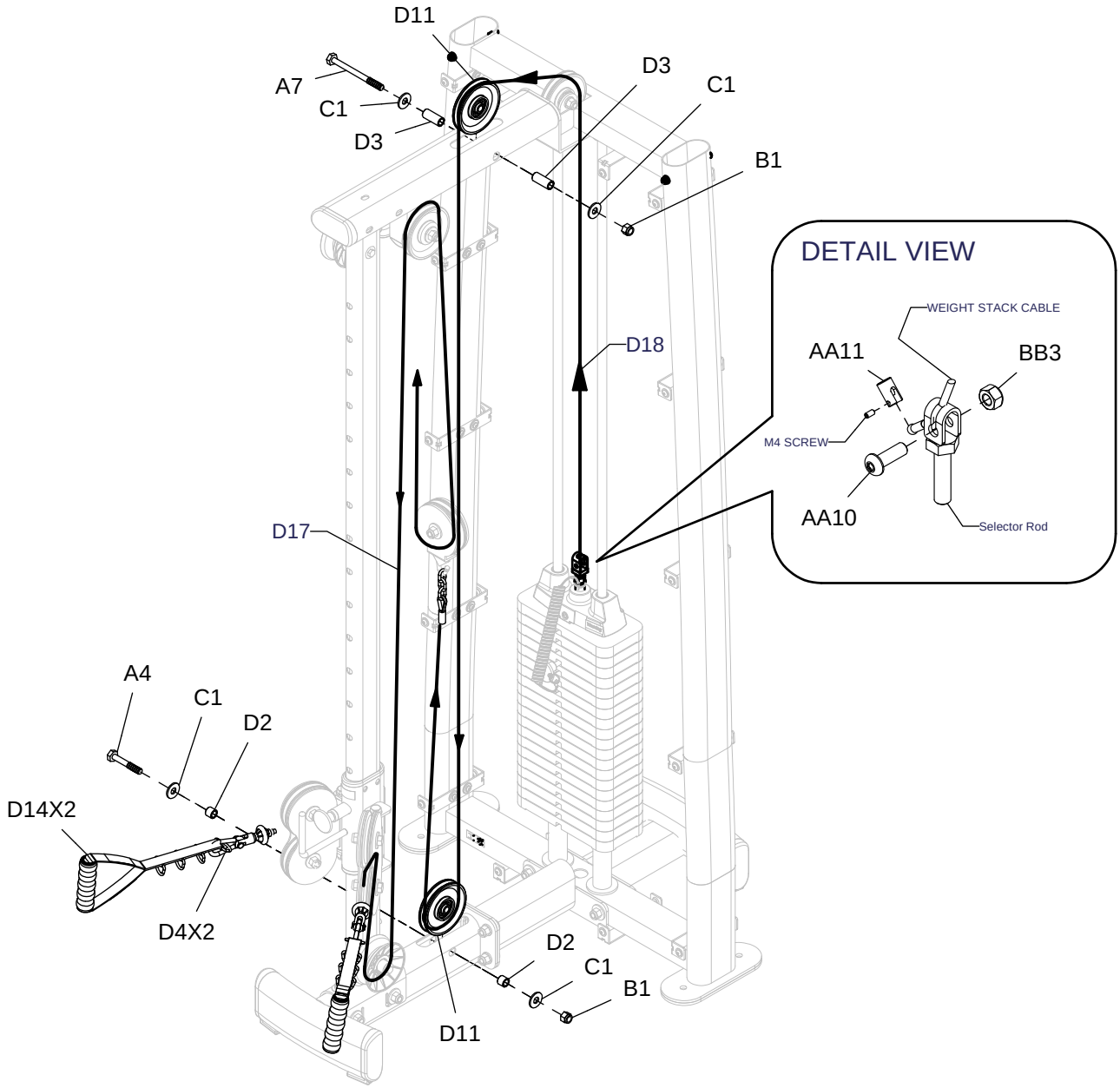

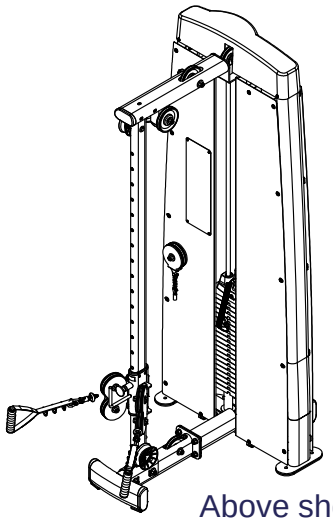

Above shows STEP 9
assembled and completed

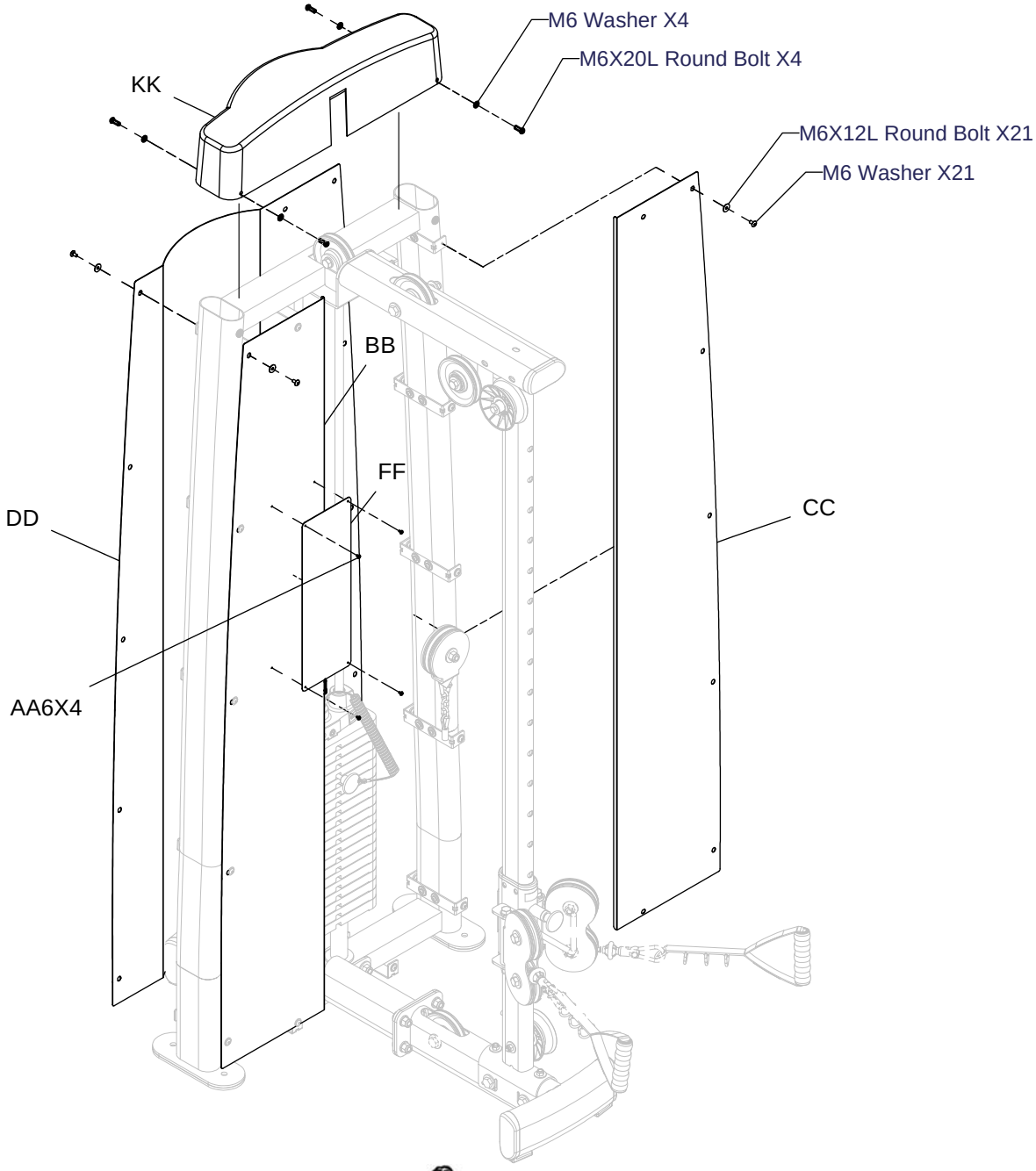

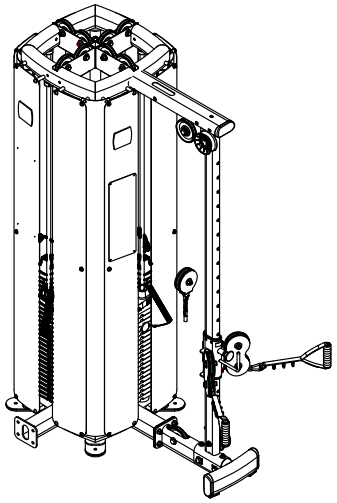

Above shows STEP 10 assembled and completed

D17.

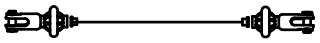

D19.

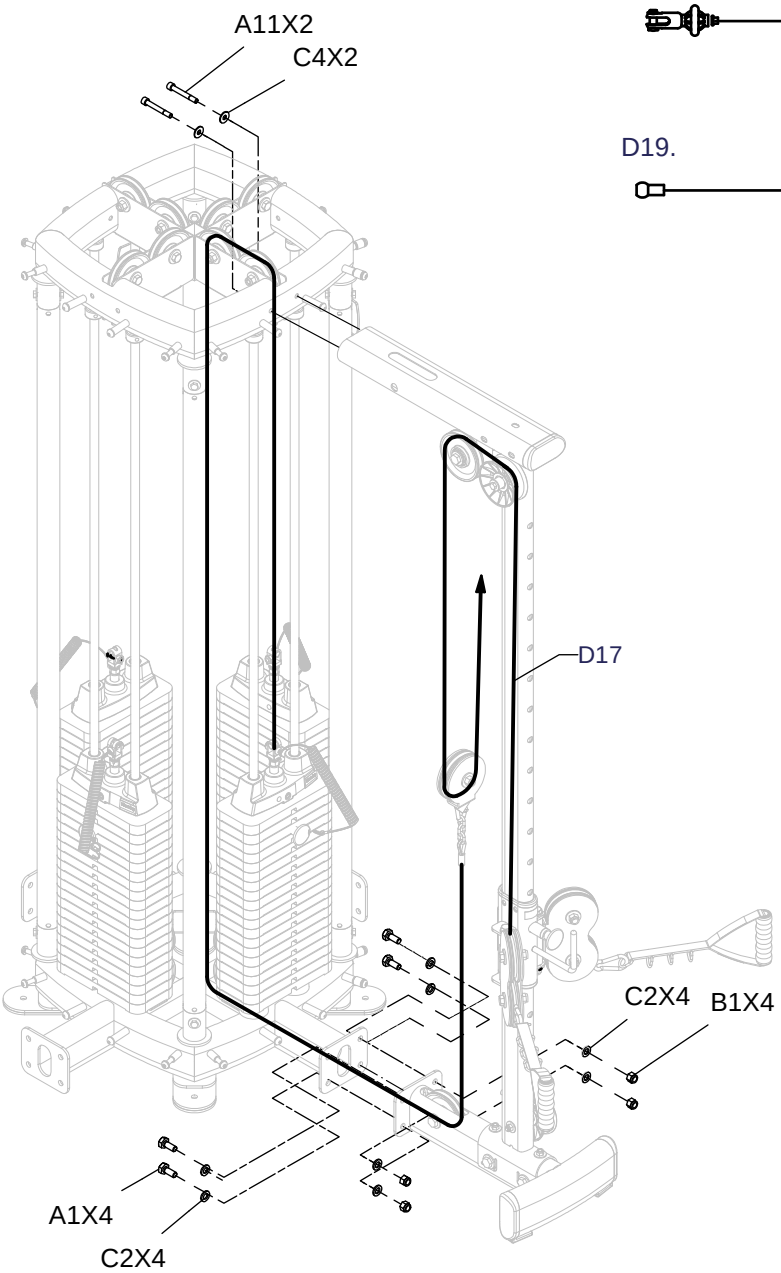

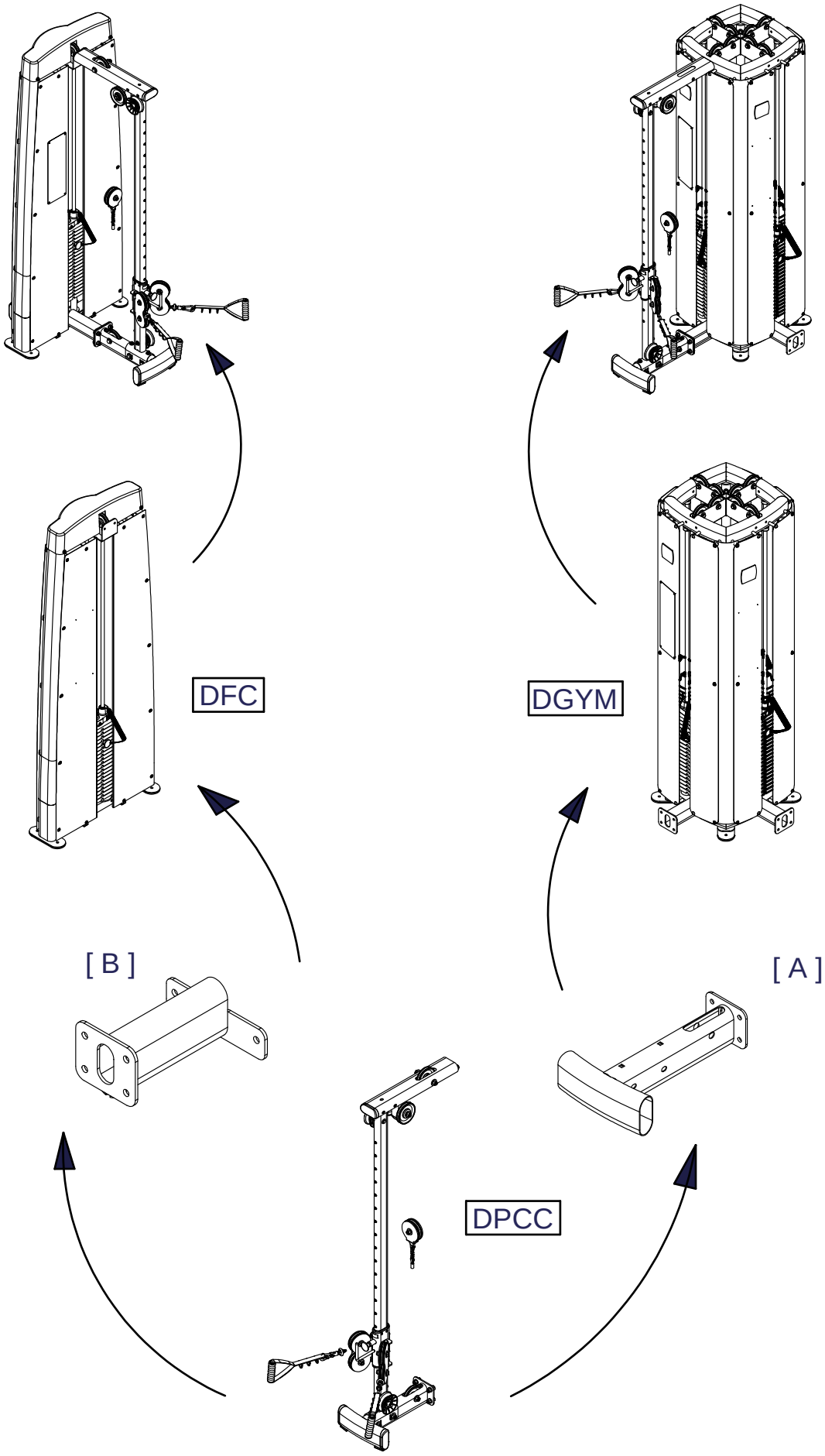
DFC
DGYM
[B]
[A]
DPCC

Anti-cable Break Up Supplement Page
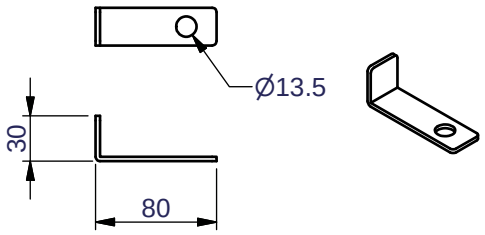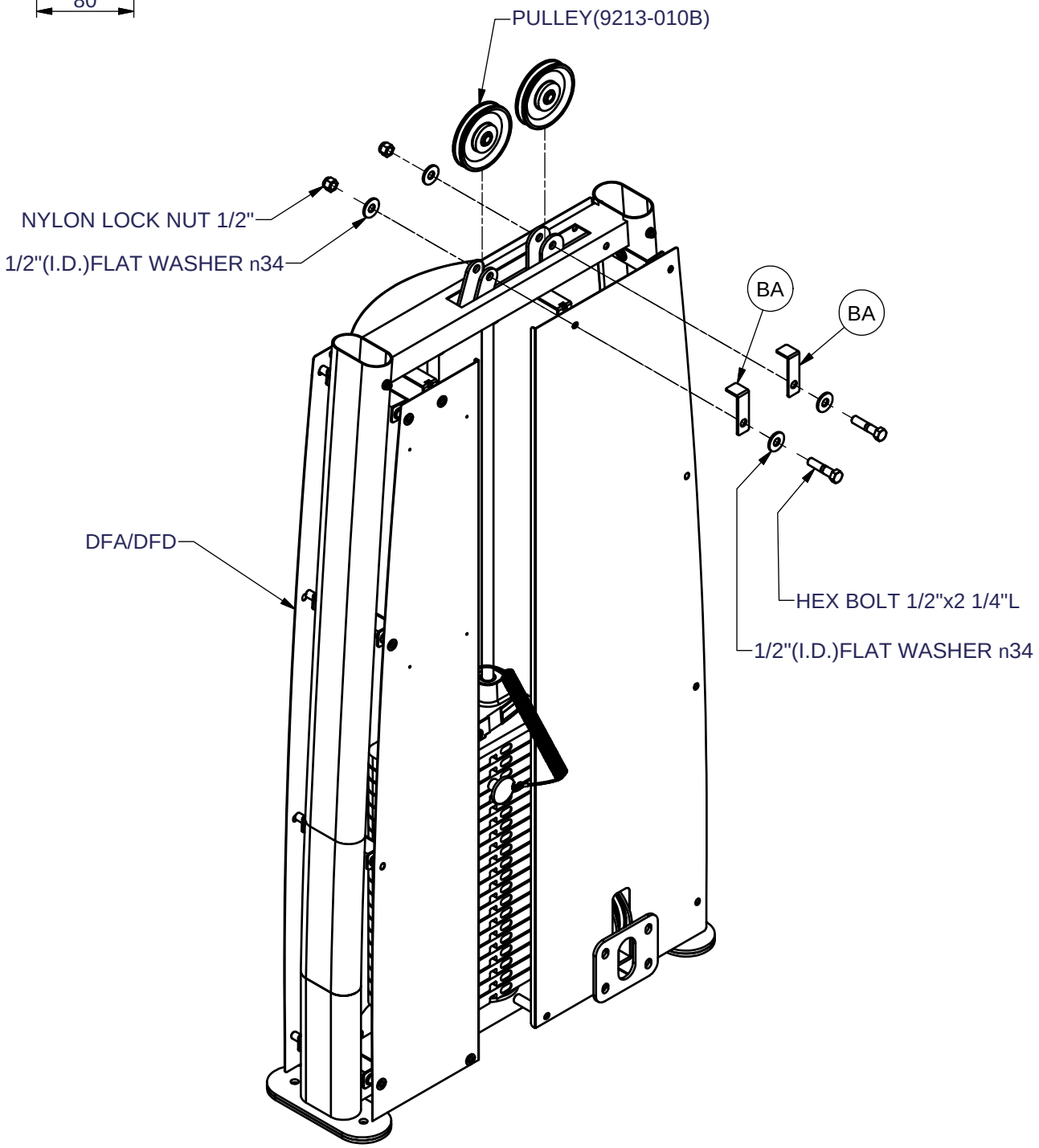
BA[2PCS]
8331-015